DESCRIPTION: BRACKET, SUPPORT - SLAC/LCLS-II CRYOMODULE
CATEGORY: BRACKET PROJECT: LCLSIICryogenicSystem

REV	REVISION CONTROL DOCUMENT	DATES	SIGNATURES	
-	F10040036---RCD	07-Jul-2016	DRAWN	K.HUNDEN
			APPROVED	

PRELIMINARY
NOT FOR PRODUCTION
OR PURCHASING PURPOSES
UNCONTROLLED COPY
LAST SAVED 01SEP15

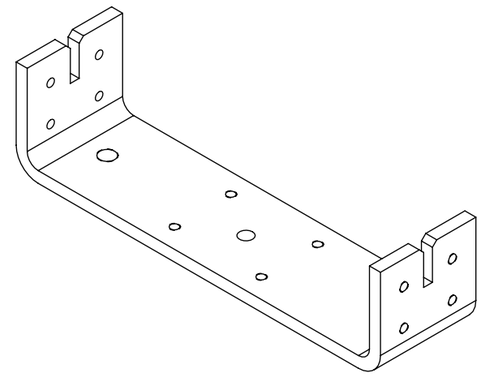

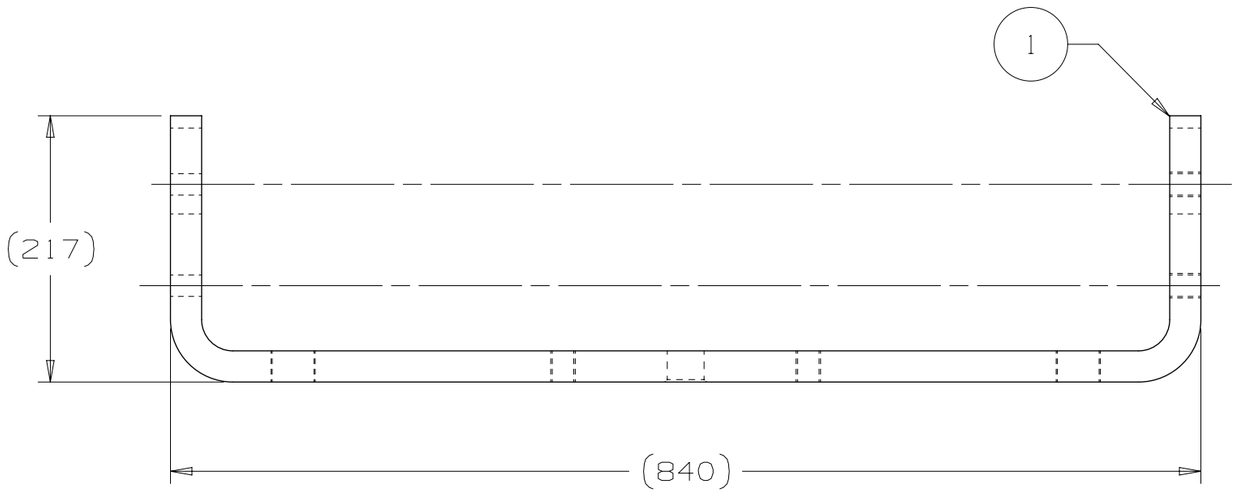

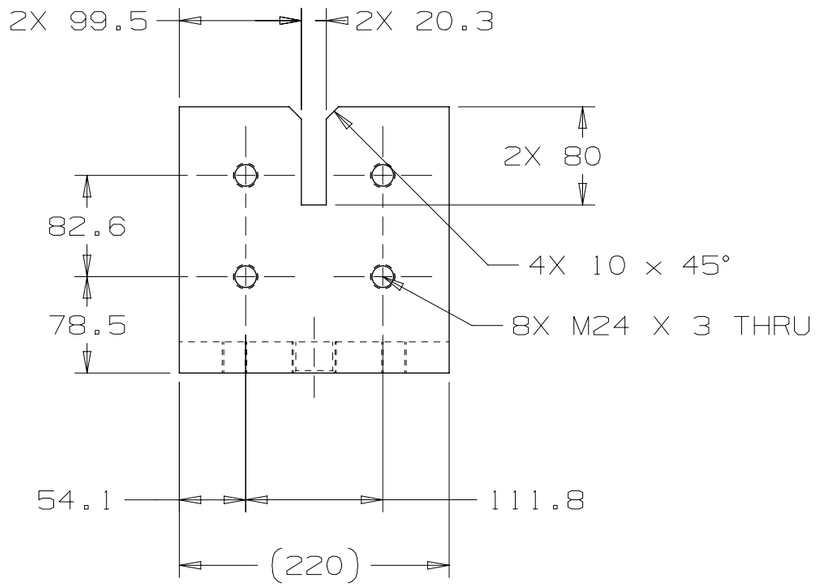

ITEM	PART NUMBER	DESCRIPTION	QTY.
1	FC0046258	U SUPPORT PLATE	1

PARTS LIST

NOTES (UNLESS OTHERWISE SPECIFIED):

1. PART MUST BE FREE OF DIRT, GREASE, OIL, CHIPS, AND BURRS.
2. DIMENSIONS IN BRACKETS [X.XX] ARE IN INCHES.

UNLESS OTHERWISE SPECIFIED				
±X	±X.X	±X.XX	±X/X	±X°
2	0.3	0.12	N/A	1°

BREAK ALL SHARP EDGES 0.5 MAX.
DO NOT SCALE DRAWING
DIMENSIONS BASED ON ASME Y14.5-2009
MAX. ALL MACH SURFACES 3.2
DRAWING UNITS: MM

DRAWN	K.HUNDEN	DATE	07-Jul-2016
CHECKED		DATE	
APPROVED		DATE	

USED ON
F10037684

MATERIAL
SEE PARTS LIST

GROUP: Accelerator Mechanical Support CAGE CODE: 0U5R6

FERMI NATIONAL ACCELERATOR LABORATORY
UNITED STATES DEPARTMENT OF ENERGY

NAME
BRACKET, SUPPORT - SLAC/LCLS-II CRYOMODULE

SCALE	SIZE	DRAWING NUMBER	SHEET	REV
1:5	A3	F10040036	1 OF 1	-