CORRECTIONS

REV	DESCRIPTION	DRAWN	DATE
		APPROVED	DATE

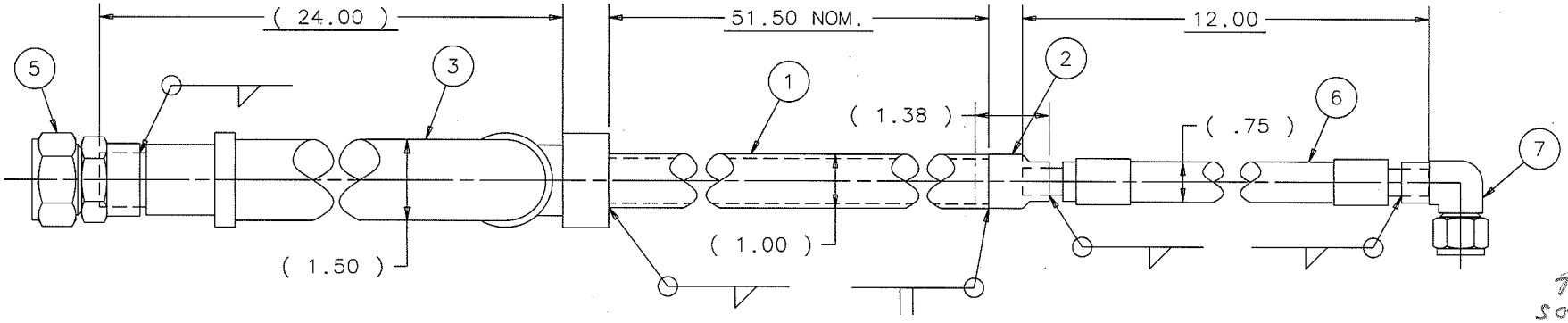

TUBE SOCKET

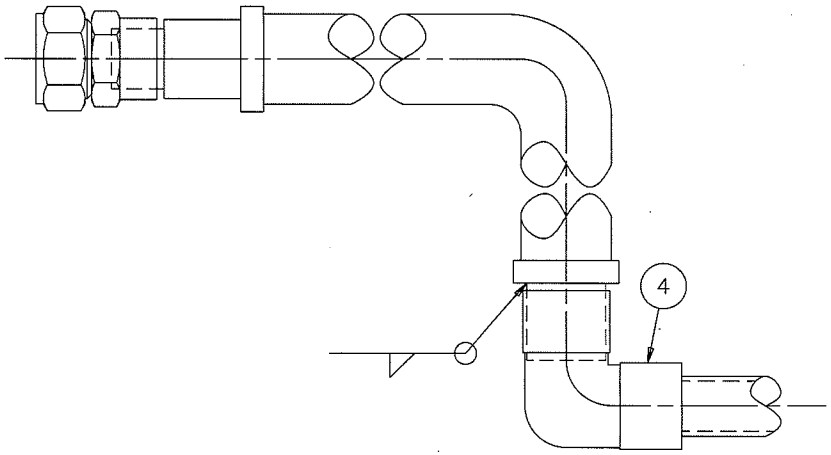

SS-1610-6-16W

SS-16-TSW-9

ITEM	PART NO.	DESCRIPTION OR SIZE	QTY.
7	SWAGELOK	1/2" 90° ELBOW 316L SS P/N SS-12MO-9-8W	1
6	SWAGELOK PN SS-FJ8TB8TB8-12	US LINE TO TARGET HOSE	1
5	SWAGELOK	TUBE FITTING, MALE CONNECTOR 1" X 1" WELD 316L SS P/N ~~SS-1610-1-16W~~	1
4	SWAGELOK	1" 90° ELBOW 316L SS P/N SS ~~-1610-9-16W~~	1
3	SWAGELOK PN SS-FJ16TB16TB16-24	US WATER SUPPLY HOSE	1
2	MB-433887	WELD ADAPTER MODIFIED	1
1	SWAGELOK	SEAMLESS TUBING 316L 1" OD X .083 WALL P/N SS-T16-S-083-20	

PARTS LIST

UNLESS OTHERWISE SPECIFIED			ORIGINATOR	M.MCGEE	22-MAR-2012
.XX	.XXX	ANGLES	DRAWN	R.STEWART	22-MAR-2012
± .02	± .005	± .5°	CHECKED	M.MCGEE	22-AUG-2012
			APPROVED	M.MCGEE	22-AUG-2012

1. BREAK ALL SHARP EDGES .015 MAX.
2. DO NOT SCALE DRAWING.
3. DIMENSIONS BASED UPON ASME Y14.5M-1994
4. MAX. ALL MACH. SURFACES 63
5. DRAWING UNITS: U.S. INCH

USED ON: ME-433843

MATERIAL: SEE PARTS LIST ABOVE

FERMI NATIONAL ACCELERATOR LABORATORY
UNITED STATES DEPARTMENT OF ENERGY

NOVA-ANU TARGET HALL MEDIUM ENERGY TARGET HELIUM LINE WELDMENT

SCALE	DRAWING NUMBER	SHEET	REV
1:2	8875.112-MB-433880	1 OF 1	

CREATED WITH : Ideas12NXSeries | GROUP: ACCELERATOR MECH. SUPPT.

NOTES:
1. ALL WELDING SHALL BE PERFORMED IN ACCORDANCE WITH THE SPECIFICATION PRESENT IN ASME B31.3 PROCESS PIPING
2. STANDARD WELDING PROCEDURE AWS B2.1-8-212 SHALL BE FOLLOWED TO PERFORM ALL THE WELDS
3. A WELDER QUALIFIED TO PERFORM WELDS PER THE ABOVE PROCEDURES AND SPECIFICATIONS SHALL BE EMPLOYED TO PERFORM ALL THE WELDS
4. 1/16" EXPANSION GAP SHALL BE LEFT BETWEEN ALL FILLET WELDS
5. ALL THE BUTT WELDS SHALL BE FULL PENETRATION
6. WELDMENT TO BE INITIALLY LEAK TESTED TO 5 Psig
7. ALL WELDS SHALL BE LEAK TIGHT TO 60 Psig (OR 150% OF SYSTEM MAWP)

NOTICE: IMAGE OBTAINED FROM FERMILAB
Computer Aided Design Group.
This image is an uncontrolled document and may not be the current, approved version.
This information is provided for REFERENCE use only. Not for MANUFACTURE, or DESIGN INFORMATION. All information contained in this document represents work sponsored by an agency of the U.S. Government. Neither the U.S. Government nor any agency thereof, nor Universities Research Association, Inc., nor any of their employees or officers, makes any warranty, express or implied, or assumes any legal liability or responsibility for the accuracy, completeness, or usefulness of any information, apparatus, product or process disclosed, or represents that its use would not infringe privately owned rights.

CORRECTIONS

REV	DESCRIPTION	DRAWN	DATE
		APPROVED	DATE

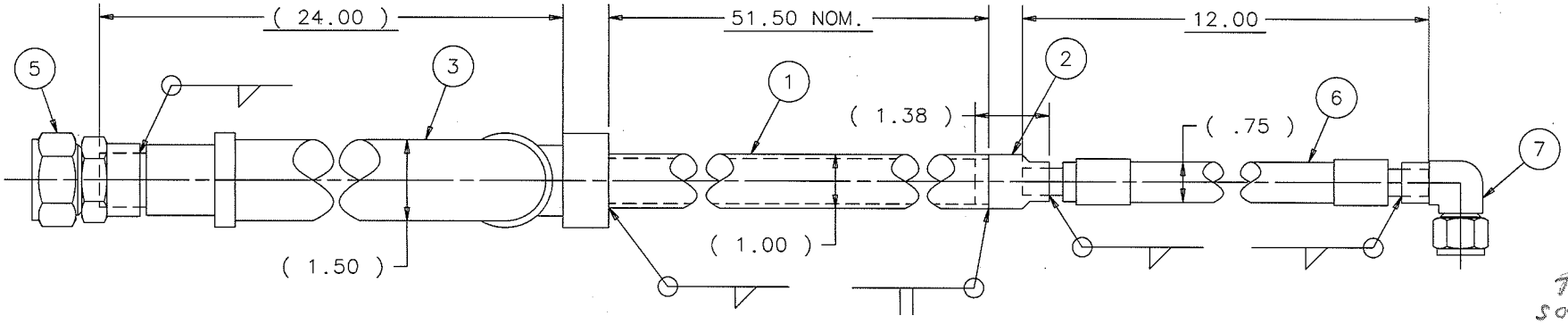

TUBE SOCKET

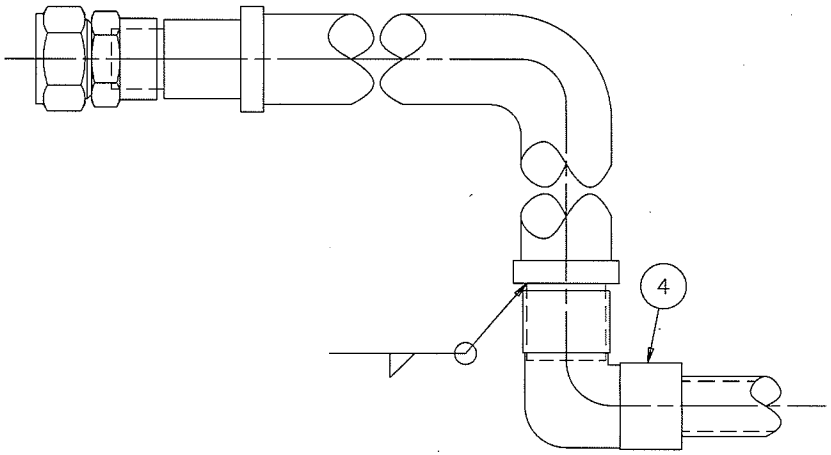

SS-1610-6-16W

SS-16-TSW-9

ITEM	PART NO.	DESCRIPTION OR SIZE	QTY.
7	SWAGELOK	1/2" 90° ELBOW 316L SS P/N SS-12MO-9-8W	1
6	SWAGELOK PN SS-FJ8TB8TB8-12	US LINE TO TARGET HOSE	1
5	SWAGELOK	TUBE FITTING, MALE CONNECTOR 1" X 1" WELD 316L SS P/N ~~SS-1610-1-16W~~	1
4	SWAGELOK	1" 90° ELBOW 316L SS P/N SS-~~1610-9-16W~~	1
3	SWAGELOK PN SS-FJ16TB16TB16-24	US WATER SUPPLY HOSE	1
2	MB-433887	WELD ADAPTER MODIFIED	1
1	SWAGELOK	SEAMLESS TUBING 316L 1" OD X .083 WALL P/N SS-T16-S-083-20	

PARTS LIST

UNLESS OTHERWISE SPECIFIED			ORIGINATOR	M.MCGEE	22-MAR-2012
.XX	.XXX	ANGLES	DRAWN	R.STEWART	22-MAR-2012
± .02	± .005	± .5°	CHECKED	M.MCGEE	22-AUG-2012
			APPROVED	M.MCGEE	22-AUG-2012

1. BREAK ALL SHARP EDGES .015 MAX.
2. DO NOT SCALE DRAWING.
3. DIMENSIONS BASED UPON ASME Y14.5M-1994
4. MAX. ALL MACH. SURFACES 63
5. DRAWING UNITS: U.S. INCH

USED ON: ME-433843

MATERIAL: SEE PARTS LIST ABOVE

NOTES:
1. ALL WELDING SHALL BE PERFORMED IN ACCORDANCE WITH THE SPECIFICATION PRESENT IN ASME B31.3 PROCESS PIPING
2. STANDARD WELDING PROCEDURE AWS B2.1-8-212 SHALL BE FOLLOWED TO PERFORM ALL THE WELDS
3. A WELDER QUALIFIED TO PERFORM WELDS PER THE ABOVE PROCEDURES AND SPECIFICATIONS SHALL BE EMPLOYED TO PERFORM ALL THE WELDS
4. 1/16" EXPANSION GAP SHALL BE LEFT BETWEEN ALL FILLET WELDS
5. ALL THE BUTT WELDS SHALL BE FULL PENETRATION
6. WELDMENT TO BE INITIALLY LEAK TESTED TO 5 Psig
7. ALL WELDS SHALL BE LEAK TIGHT TO 60 Psig (OR 150% OF SYSTEM MAWP)

NOTICE: IMAGE OBTAINED FROM FERMILAB
Computer Aided Design Group.
This image is an uncontrolled document and may not be the current, approved version.
This information is provided for REFERENCE use only. Not for MANUFACTURE, or DESIGN INFORMATION. All information contained in this document represents work sponsored by an agency of the U.S. Government. Neither the U.S. Government nor any agency thereof, nor Universities Research Association, Inc., nor any of their employees or officers, makes any warranty, express or implied, or assumes any legal liability or responsibility for the accuracy, completeness, or usefulness of any information, apparatus, product or process disclosed, or represents that its use would not infringe privately owned rights.

FERMI NATIONAL ACCELERATOR LABORATORY
UNITED STATES DEPARTMENT OF ENERGY

NOVA-ANU TARGET HALL MEDIUM ENERGY TARGET HELIUM LINE WELDMENT

SCALE	DRAWING NUMBER	SHEET	REV
1:2	8875.112-MB-433880	1 OF 1	

CREATED WITH : Ideas12NXSeries | GROUP: ACCELERATOR MECH. SUPPT.

CORRECTIONS

REV	DESCRIPTION	DRAWN	DATE
		APPROVED	DATE
A	24.00 HOSE LENGTH WAS 22.00	R.STEWART	27-SEP-2012
		M.MCGEE	27-SEP-2012

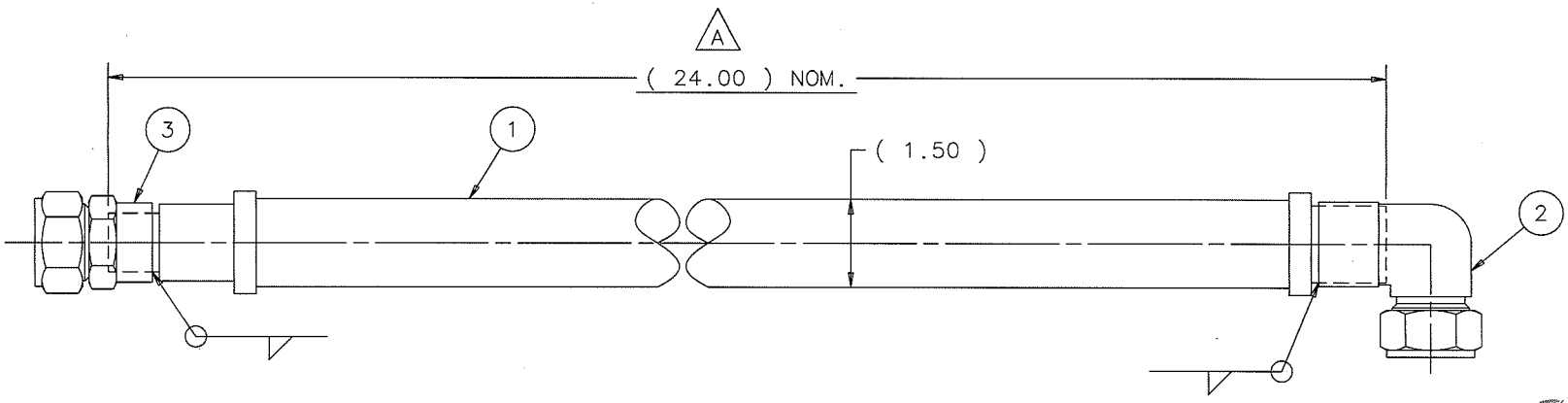

TUBE SOCKET

SS-1610-6-16W

ITEM	PART NO.	DESCRIPTION OR SIZE	QTY.
3	SWAGELOK	TUBE FITTING, MALE CONNECTOR 1" X 1" WELD 316L SS P/N ~~SS-1610-1-16W~~	1
2	SWAGELOK	1" 90° ELBOW 316L SS P/N SS-1610-9-16W	1
1	SWAGELOK PN SS-FJ16TB16TB16-24	DS WATER SUPPLY HOSE	1

A

PARTS LIST

UNLESS OTHERWISE SPECIFIED			ORIGINATOR	M.MCGEE	22-MAR-2012
.XX	.XXX	ANGLES	DRAWN	R.STEWART	22-MAR-2012
± .02	± .005	± .5°	CHECKED	M.MCGEE	22-AUG-2012
			APPROVED	M.MCGEE	22-AUG-2012

1. BREAK ALL SHARP EDGES .015 MAX.
2. DO NOT SCALE DRAWING.
3. DIMENSIONS BASED UPON ASME Y14.5M-1994
4. MAX. ALL MACH. SURFACES 63
5. DRAWING UNITS: U.S. INCH

USED ON: ME-433843

MATERIAL: SEE PARTS LIST ABOVE

FERMI NATIONAL ACCELERATOR LABORATORY
UNITED STATES DEPARTMENT OF ENERGY

NOVA-ANU TARGET HALL MEDIUM ENERGY TARGET DS RETURN HOSE WELDMENT

SCALE	DRAWING NUMBER	SHEET	REV
1:2	8875.112-MB-433888	1 OF 1	A

CREATED WITH : Ideas12NXSeries | GROUP: ACCELERATOR MECH. SUPPT.

NOTES:
1. ALL WELDING SHALL BE PERFORMED IN ACCORDANCE WITH THE SPECIFICATION PRESENT IN ASME B31.3 PROCESS PIPING
2. STANDARD WELDING PROCEDURE AWS B2.1-8-212 SHALL BE FOLLOWED TO PERFORM ALL THE WELDS
3. A WELDER QUALIFIED TO PERFORM WELDS PER THE ABOVE PROCEDURES AND SPECIFICATIONS SHALL BE EMPLOYED TO PERFORM ALL THE WELDS
4. 1/16" EXPANSION GAP SHALL BE LEFT BETWEEN ALL FILLET WELDS
5. ALL THE BUTT WELDS SHALL BE FULL PENETRATION
6. WELDMENT TO BE INITIALLY LEAK TESTED TO 5 Psig
7. ALL WELDS SHALL BE LEAK TIGHT TO 60 Psig (OR 150% OF SYSTEM MAWP)

NOTICE: IMAGE OBTAINED FROM FERMILAB
Computer Aided Design Group.
This image is an uncontrolled document and may not be the current, approved version.
This information is provided for REFERENCE use only. Not for MANUFACTURE, or DESIGN INFORMATION. All information contained in this document represents work sponsored by an agency of the U.S. Government. Neither the U.S. Government nor any agency thereof, nor Universities Research Association, Inc., nor any of their employees or officers, makes any warranty, express or implied, or assumes any legal liability or responsibility for the accuracy, completeness, or usefulness of any information, apparatus, product or process disclosed, or represents that its use would not infringe privately owned rights.

CORRECTIONS

REV	DESCRIPTION	DRAWN	DATE
		APPROVED	DATE
A	22.00 HOSE LENGTH WAS 18.00	R.STEWART	27-SEP-2012
		M.MCGEE	27-SEP-2012

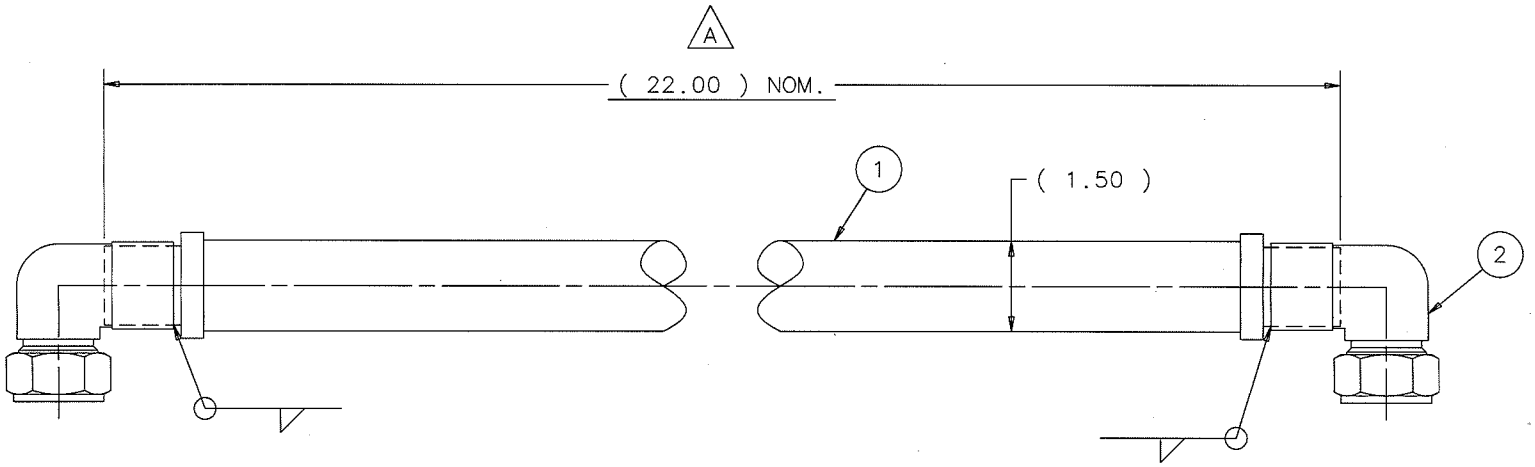

SS-FJ 16TB16TB16-22

ITEM	PART NO.	DESCRIPTION OR SIZE	QTY.
2	SWAGELOK	1" 90° ELBOW 316L SS P/N SS-1610-9-16W	2
1	SWAGELOK PN ~~SS-FJ16TB16TB-22~~	DS WATER SUPPLY HOSE	1

PARTS LIST

UNLESS OTHERWISE SPECIFIED			ORIGINATOR	M.MCGEE	22-MAR-2012
.XX	.XXX	ANGLES	DRAWN	R.STEWART	22-MAR-2012
± .02	± .005	± .5°	CHECKED	M.MCGEE	22-AUG-2012
			APPROVED	M.MCGEE	22-AUG-2012

1. BREAK ALL SHARP EDGES .015 MAX.
2. DO NOT SCALE DRAWING.
3. DIMENSIONS BASED UPON ASME Y14.5M-1994
4. MAX. ALL MACH. SURFACES 63
5. DRAWING UNITS: U.S. INCH

USED ON: ME-433843

MATERIAL: SEE PARTS LIST ABOVE

FERMI NATIONAL ACCELERATOR LABORATORY
UNITED STATES DEPARTMENT OF ENERGY

NOVA-ANU TARGET HALL MEDIUM ENERGY TARGET DS SUPPLY HOSE WELDMENT

SCALE	DRAWING NUMBER	SHEET	REV
1:2	8875.112-MB-433889	1 OF 1	A

CREATED WITH : Ideas12NXSeries | GROUP: ACCELERATOR MECH. SUPPT.

NOTES:
1. ALL WELDING SHALL BE PERFORMED IN ACCORDANCE WITH THE SPECIFICATION PRESENT IN ASME B31.3 PROCESS PIPING
2. STANDARD WELDING PROCEDURE AWS B2.1-8-212 SHALL BE FOLLOWED TO PERFORM ALL THE WELDS
3. A WELDER QUALIFIED TO PERFORM WELDS PER THE ABOVE PROCEDURES AND SPECIFICATIONS SHALL BE EMPLOYED TO PERFORM ALL THE WELDS
4. 1/16" EXPANSION GAP SHALL BE LEFT BETWEEN ALL FILLET WELDS
5. ALL THE BUTT WELDS SHALL BE FULL PENETRATION
6. WELDMENT TO BE INITIALLY LEAK TESTED TO 5 Psig
7. ALL WELDS SHALL BE LEAK TIGHT TO 60 Psig (OR 150% OF SYSTEM MAWP)

NOTICE: IMAGE OBTAINED FROM FERMILAB
Computer Aided Design Group.
This image is an uncontrolled document and may not be the current, approved version.
This information is provided for REFERENCE use only. Not for MANUFACTURE, or DESIGN INFORMATION. All information contained in this document represents work sponsored by an agency of the U.S. Government. Neither the U.S. Government nor any agency thereof, nor Universities Research Association, Inc., nor any of their employees or officers, makes any warranty, express or implied, or assumes any legal liability or responsibility for the accuracy, completeness, or usefulness of any information, apparatus, product or process disclosed, or represents that its use would not infringe privately owned rights.

CORRECTIONS

REV	DESCRIPTION	DRAWN	DATE
		APPROVED	DATE

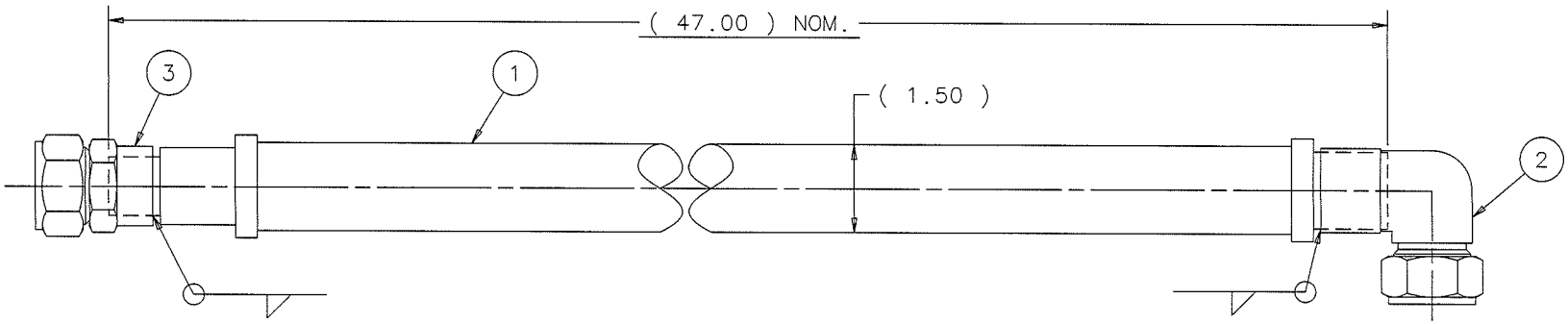

SS-1610-6-16W

TUBE SOCKET

ITEM	PART NO.	DESCRIPTION OR SIZE	QTY.
3	SWAGELOK	TUBE FITTING, MALE CONNECTOR 1" X 1" WELD 316L SS P/N ~~SS-1610-1-16W~~	1
2	SWAGELOK	1" 90° ELBOW 316L SS P/N SS-1610-9-16W	1
1	SWAGELOK PN SS-FJ16TB16TB16-47	DS WATER SUPPLY HOSE	1

PARTS LIST

UNLESS OTHERWISE SPECIFIED			ORIGINATOR	M.MCGEE	22-MAR-2012
.XX	.XXX	ANGLES	DRAWN	R.STEWART	22-MAR-2012
± .02	± .005	± .5°	CHECKED	M.MCGEE	22-AUG-2012
			APPROVED	M.MCGEE	22-AUG-2012

1. BREAK ALL SHARP EDGES .015 MAX.
2. DO NOT SCALE DRAWING.
3. DIMENSIONS BASED UPON ASME Y14.5M-1994
4. MAX. ALL MACH. SURFACES 63
5. DRAWING UNITS: U.S. INCH

USED ON: ME-433843

MATERIAL: SEE PARTS LIST ABOVE

FERMI NATIONAL ACCELERATOR LABORATORY
UNITED STATES DEPARTMENT OF ENERGY

NOVA-ANU TARGET HALL MEDIUM ENERGY TARGET DS TARGET HOSE WELDMENT

SCALE	DRAWING NUMBER	SHEET	REV
1:2	8875.112-MB-433890	1 OF 1	

CREATED WITH : Ideas12NXSeries | GROUP: ACCELERATOR MECH. SUPPT.

NOTES:
1. ALL WELDING SHALL BE PERFORMED IN ACCORDANCE WITH THE SPECIFICATION PRESENT IN ASME B31.3 PROCESS PIPING
2. STANDARD WELDING PROCEDURE AWS B2.1-8-212 SHALL BE FOLLOWED TO PERFORM ALL THE WELDS
3. A WELDER QUALIFIED TO PERFORM WELDS PER THE ABOVE PROCEDURES AND SPECIFICATIONS SHALL BE EMPLOYED
4. 1/16" EXPANSION GAP SHALL BE LEFT BETWEEN ALL FILLET WELDS
5. ALL THE BUTT WELDS SHALL BE FULL PENETRATION
6. WELDMENT TO BE INITIALLY LEAK TESTED TO 5 Psig
7. ALL WELDS SHALL BE LEAK TIGHT TO 60 Psig (OR 150% OF SYSTEM MAWP)

NOTICE: IMAGE OBTAINED FROM FERMILAB'S Computer Aided Design Group.

This image is an uncontrolled document and may not be the current, approved version.

This information is provided for REFERENCE use only. Not for MANUFACTURE, or DESIGN INFORMATION. All information contained in this document represents work sponsored by an agency of the U.S. Government. Neither the U.S. Government nor any agency thereof, nor Universities Research Association, Inc., nor any of their employees or officers, makes any warranty, express or implied, or assumes any legal liability or responsibility for the accuracy, completeness, or usefulness of any information, apparatus, product or process disclosed, or represents that its use would not infringe privately owned rights.