REV	DESCRIPTION	DRAWN	DATE
		APPROVED	DATE

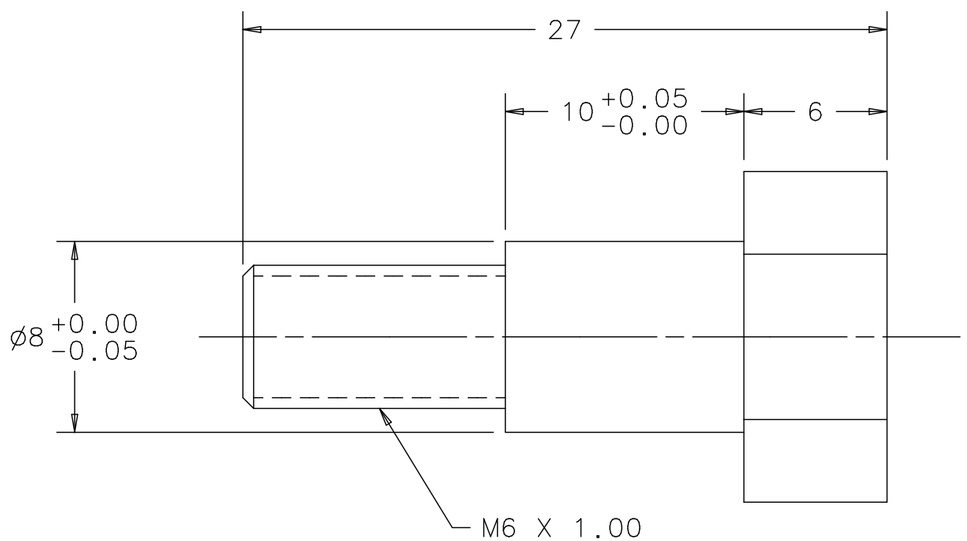

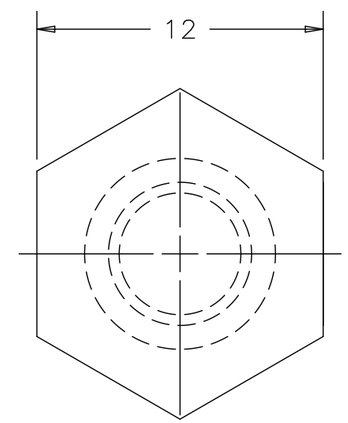

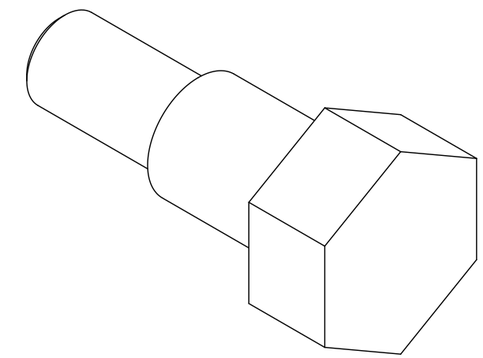

UNLESS OTHERWISE SPECIFIED		
METRIC	X.X	ANGLES
± 0.25	± 0.1	± .5°

1. BREAK ALL SHARP EDGES 0.4 MAX.
2. DO NOT SCALE DRAWING.
3. DIMENSIONS BASED UPON ASME Y14.5M-1994
4. MAX. ALL MACH. SURFACES 1.6
5. DRAWING UNITS: METRIC

ORIGINATOR	M.MCGEE/P.HURH	05-JAN-2012
DRAWN	R.STEWART	05-JAN-2012
CHECKED	P.HURH	02-FEB-2012
APPROVED	M.MCGEE	02-FEB-2012

USED ON: ME-433791

MATERIAL: ANODIZED 7075-T73 ALUMINUM

FERMI NATIONAL ACCELERATOR LABORATORY
UNITED STATES DEPARTMENT OF ENERGY

NOVA-ANU TARGET HALL
MEDIUM ENERGY TARGET
8MM DIA X 10MM LG SHOULDER SCREW

SCALE	DRAWING NUMBER	SHEET	REV
4:1	8875.112-MB-433868	1 OF 1	

CREATED WITH : Ideas12NXSeries | GROUP: ACCELERATOR MECH. SUPPT.

Created: 08:09:38 on 02-02-12 (D-M-Y) By: rstewart State: 3-RELEASED