REV	DESCRIPTION	DRAWN	DATE
		APPROVED	DATE

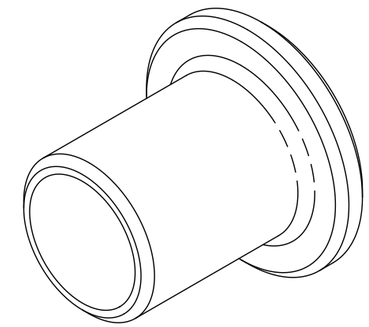

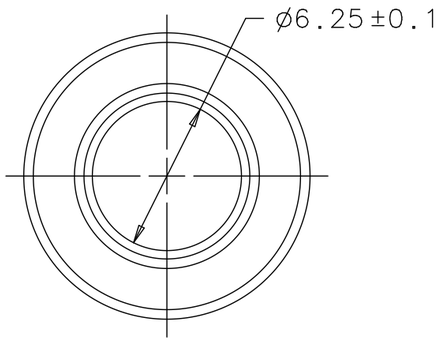

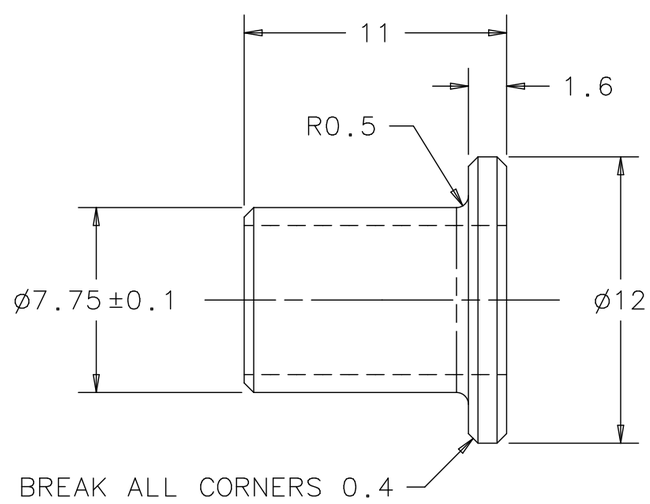

UNLESS OTHERWISE SPECIFIED			ORIGINATOR	M.MCGEE/P.HURH	29-AUG-2011
METRIC	X.X	ANGLES	DRAWN	R.STEWART	29-AUG-2011
± 0.25	± 0.1	± .5°	CHECKED	P.HURH	08-SEP-2011
1. BREAK ALL SHARP EDGES 0.4 MAX. 2. DO NOT SCALE DRAWING. 3. DIMENSIONS BASED UPON ASME Y14.5M-1994 4. MAX. ALL MACH. SURFACES 1.8 5. DRAWING UNITS: METRIC			APPROVED	M.MCGEE	08-SEP-2011
			USED ON	MC-433744 MC-433749	
			MATERIAL	ANODIZED 7075 ALUMINUM	

FERMI NATIONAL ACCELERATOR LABORATORY
UNITED STATES DEPARTMENT OF ENERGY

NOVA-ANU TARGET HALL
MEDIUM ENERGY TARGET
BUDAL SPRING CENTERING WASHER

SCALE	DRAWING NUMBER	SHEET	REV
4:1	8875.112-MB-433799	1 OF 1	

CREATED WITH : Ideas12NXSeries GROUP: ACCELERATOR MECH. SUPPT.

Created: 14:34:27 on 22-12-11 (D-M-Y) By: rstewart State: 3-RELEASED