REV	DESCRIPTION	DRAWN	DATE
		APPROVED	DATE

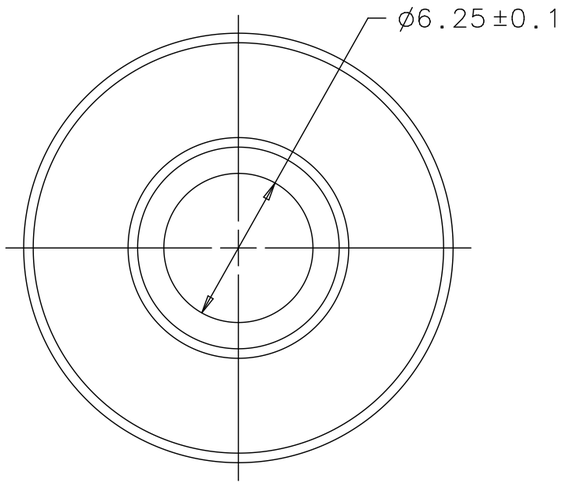

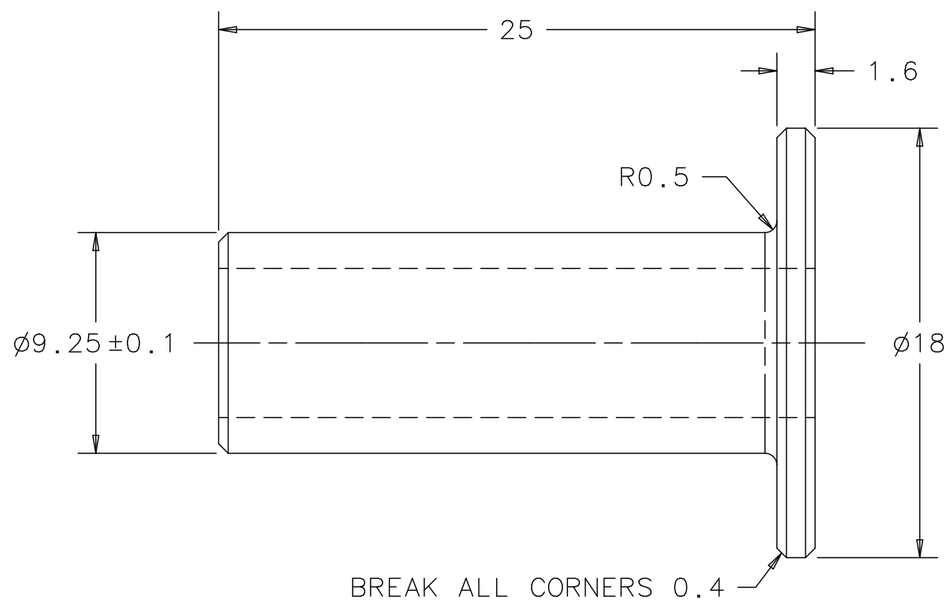

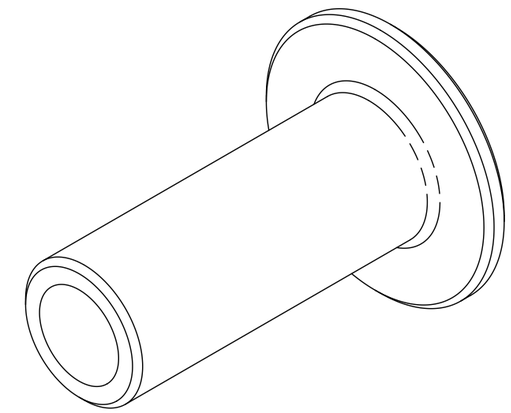

UNLESS OTHERWISE SPECIFIED			ORIGINATOR	M.MCGEE/P.HURH	29-AUG-2011
METRIC	X.X	ANGLES	DRAWN	R.STEWART	29-AUG-2011
± 0.25	± 0.1	± .5°	CHECKED	P.HURH	08-SEP-2011
			APPROVED	M.MCGEE	08-SEP-2011

1. BREAK ALL SHARP EDGES 0.4 MAX.
2. DO NOT SCALE DRAWING.
3. DIMENSIONS BASED UPON ASME Y14.5M-1994
4. MAX. ALL MACH. SURFACES 1.6
5. DRAWING UNITS: METRIC

USED ON: ME-433790

MATERIAL: ANODIZED 7075 ALUMINUM

FERMI NATIONAL ACCELERATOR LABORATORY
UNITED STATES DEPARTMENT OF ENERGY

NOVA-ANU TARGET HALL MEDIUM ENERGY TARGET SPRING CENTERING WASHER

SCALE	DRAWING NUMBER	SHEET	REV
4:1	8875.112-MB-433798	1 OF 1	

CREATED WITH : Ideas12NXSeries | GROUP: ACCELERATOR MECH. SUPPT.

Created: 14:28:04 on 22-12-11 (D-M-Y) By: rstewart State: 3-RELEASED