REV	DESCRIPTION	DRAWN	DATE
		APPROVED	DATE

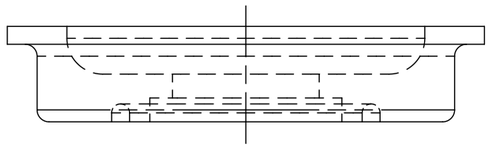

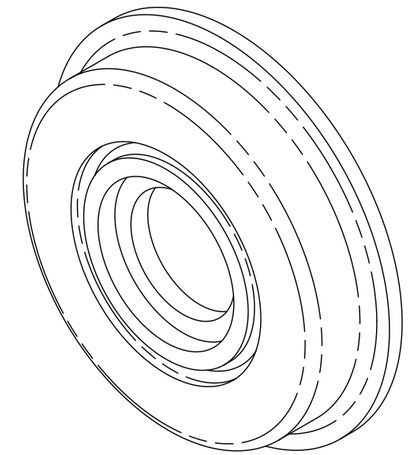

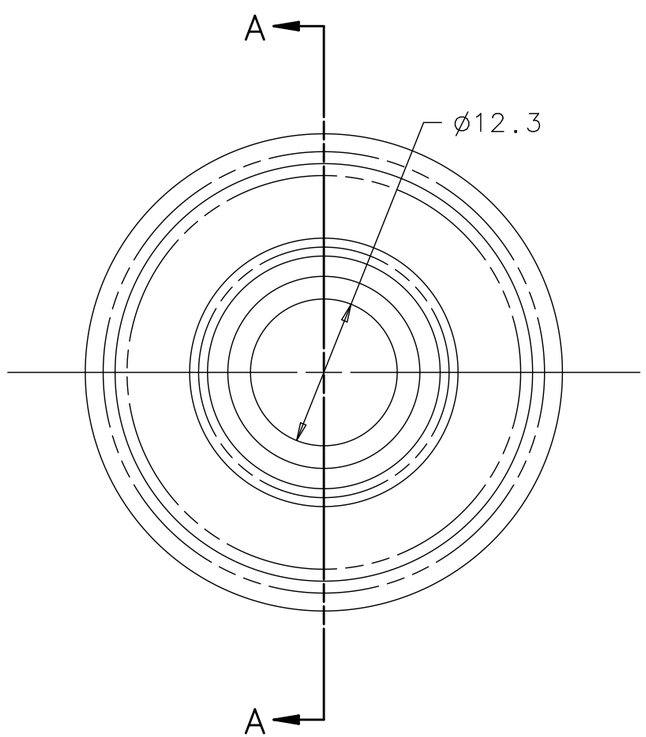

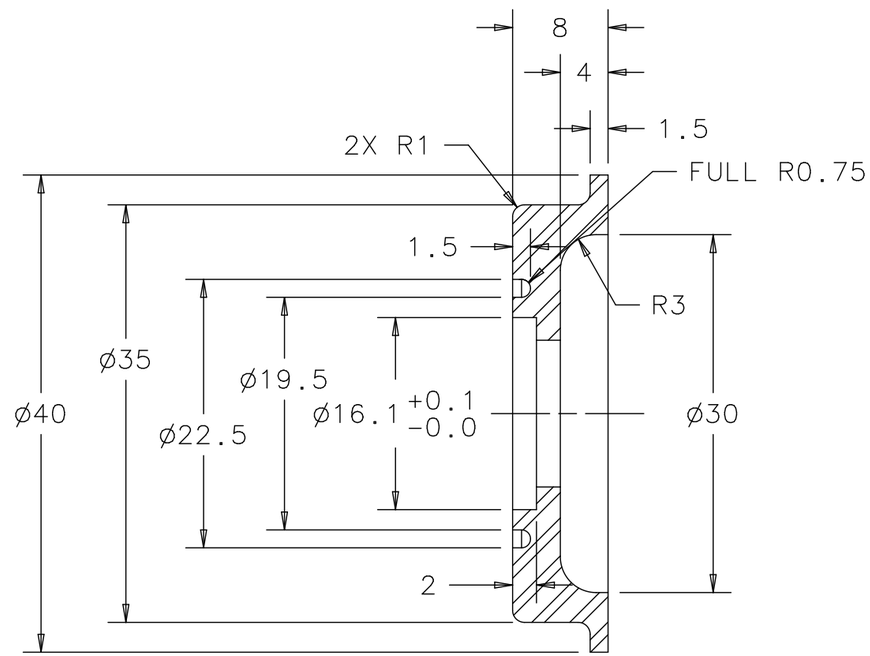

SECTION A-A

UNLESS OTHERWISE SPECIFIED			ORIGINATOR	M.MCGEE/P.HURH	18-AUG-2011
METRIC	X.X	ANGLES	DRAWN	R.STEWART	18-AUG-2011
± 0.25	± 0.1	± .5°	CHECKED	P.HURH	13-DEC-2011
			APPROVED	M.MCGEE	13-DEC-2011

1. BREAK ALL SHARP EDGES 0.4 MAX.
2. DO NOT SCALE DRAWING.
3. DIMENSIONS BASED UPON ASME Y14.5M-1994
4. MAX. ALL MACH. SURFACES 1.8
5. DRAWING UNITS: METRIC

USED ON: MB-433794

MATERIAL: 316L STAINLESS STEEL

FERMI NATIONAL ACCELERATOR LABORATORY
UNITED STATES DEPARTMENT OF ENERGY

NOVA-ANU TARGET HALL MEDIUM ENERGY TARGET UPSTREAM END WALL WATER FLANGE

SCALE	DRAWING NUMBER	SHEET	REV
2:1	8875.112-MB-433795	1 OF 1	

CREATED WITH : Ideas12NXSeries | GROUP: ACCELERATOR MECH. SUPPT.

Created: 15:37:34 on 13-12-11 (D-M-Y) By: rstewart State: 3-RELEASED