REV	DESCRIPTION	DRAWN / APPROVED	DATE / DATE
A	ITEMS 1 AND 3 UPDATED	R.STEWART	24-JAN-2012
		P.HURH	02-FEB-2012

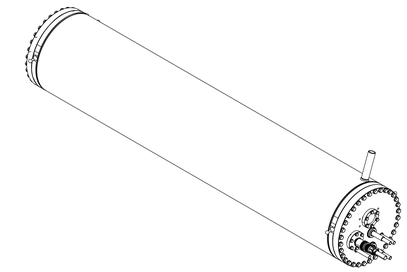

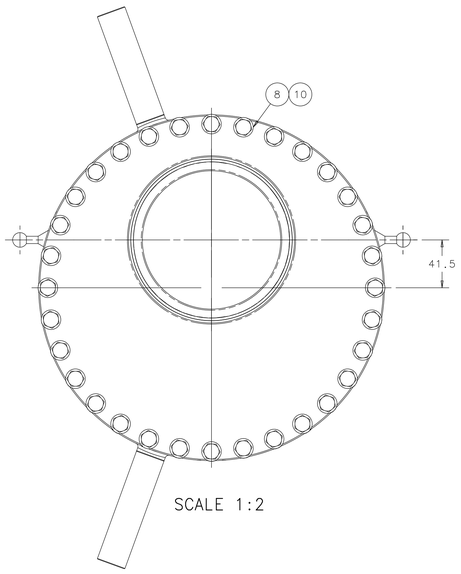

SCALE 1:2

DOWNSTREAM END

UPSTREAM END

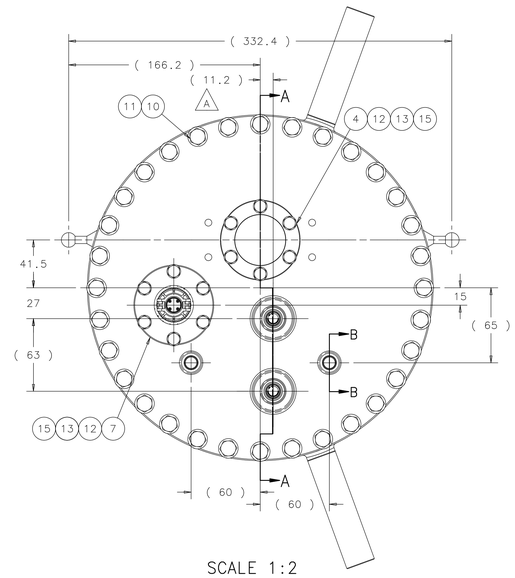

SCALE 1:2

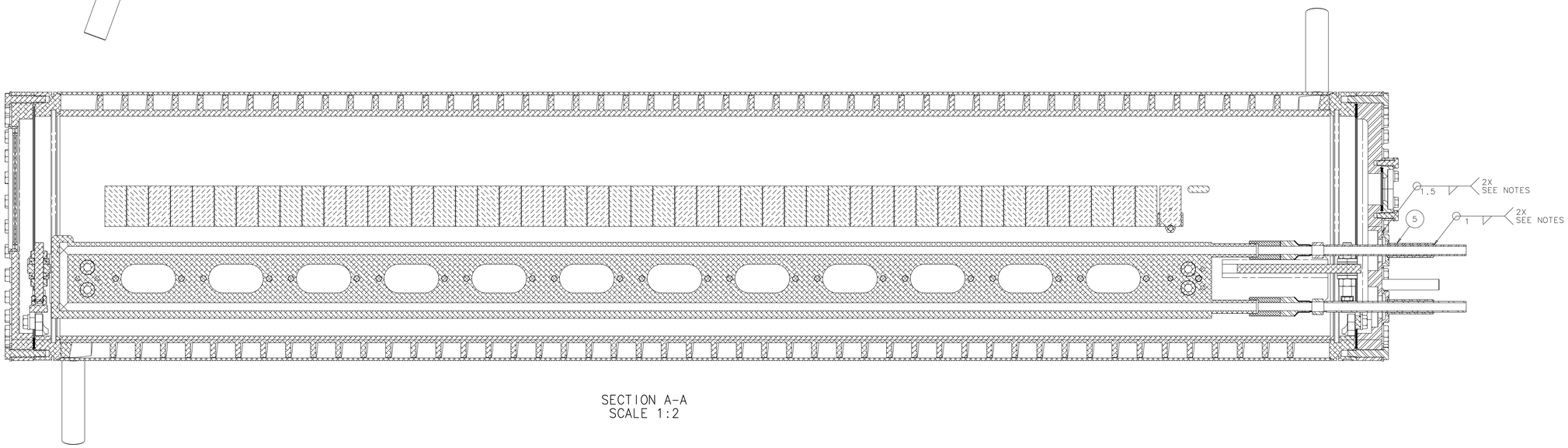

SECTION A-A
SCALE 1:2

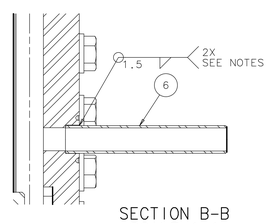

SECTION B-B
SCALE 1:1

NOTES: 1. ALL WELDS TO BE LEAK TESTED AS REQUIRED BY MSD ENGINEERING SPECIFICATION 1320.000-ES-296248

2. WATER FLANGE WELDMENT (ITEM 5) POSITION FLOATS, IT IS TO BE DETERMINED BY NATURAL POSITION OF WATER LINES OF THE TARGET ALIGNMENT ASSEMBLY (ITEM 1)

ITEM	PART NO.	DESCRIPTION OR SIZE	QTY.
15	NOR-CAL PRODUCTS	ø2.75* OD OFHC COPPER GASKET P/N G-275 OR EQUAL	2
14	NOR-CAL PRODUCTS	ø12* OD 1100 SERIES ALUMINUM GASKET P/N G-1200-1-AL OR EQUAL	2
13		M6 FLAT WASHER 316L STAINLESS STEEL	12
12		M6 X 1.00 20MM LONG HHCS 316L STAINLESS STEEL	12
11		M8 FLAT WASHER 316L STAINLESS STEEL	32
10		M8 X 1.25 40MM LONG HHCS 316L STAINLESS STEEL	32
9		M8 FLAT WASHER ANODIZED 7075-T73 ALUMINUM	64
8		M8 X 1.25 40MM LONG HHCS ANODIZED 7075-T73 ALUMINUM	64
7	MDC PRODUCTS	MPIN 5 .032 2.75 DS FLANGE MOUNT ELECTRICAL FEEDTHROUGH P/N 9112002	1
6	MB-433797	HELIUM INLET TUBE	2
5	MB-433794	WATER FLANGE WELDMENT	2
4	MB-363049	BE FOIL WINDOW BRAZE ASSEMBLY	1
A 3	ME-433793	UPSTREAM END WALL	1
2	MC-433714	DOWNSTREAM END WALL ASSEMBLY	1
A 1	ME-433791	TARGET ALIGNMENT ASSEMBLY	1

PARTS LIST

UNLESS OTHERWISE SPECIFIED			ORIGINATOR	M.MCGEE/P.HURH	18-AUG-2011
METRIC	X.X	ANGLES	DRAWN	R.STEWART	18-AUG-2011
± 0.25	± 0.1	± .5°	CHECKED	P.HURH	13-DEC-2011
			APPROVED	M.MCGEE	13-DEC-2011
			USED ON	MD-433810	
			MATERIAL	SEE PARTS LIST ABOVE	

1. BREAK ALL SHARP EDGES 0.4 MAX.
2. DO NOT SCALE DRAWING.
3. DIMENSIONS BASED UPON ASME Y14.5M-1994
4. MAX. ALL MACH. SURFACES 1.6
5. DRAWING UNITS: METRIC

FERMI NATIONAL ACCELERATOR LABORATORY
UNITED STATES DEPARTMENT OF ENERGY

NOVA-ANU TARGET HALL
MEDIUM ENERGY TARGET
MEDIUM ENERGY TARGET ASSEMBLY

SCALE	DRAWING NUMBER	SHEET	REV
1:4	8875.112-ME-433792	1 OF 1	A

CREATED WITH : Ideas12NXSeries GROUP: ACCELERATOR MECH. SUPPT.