REV	DESCRIPTION	DRAWN	DATE
		APPROVED	DATE
A	ø6.5 COUNTERBORE ADDED	R.STEWART	09-SEP-2011
		P.HURH	12-SEP-20011

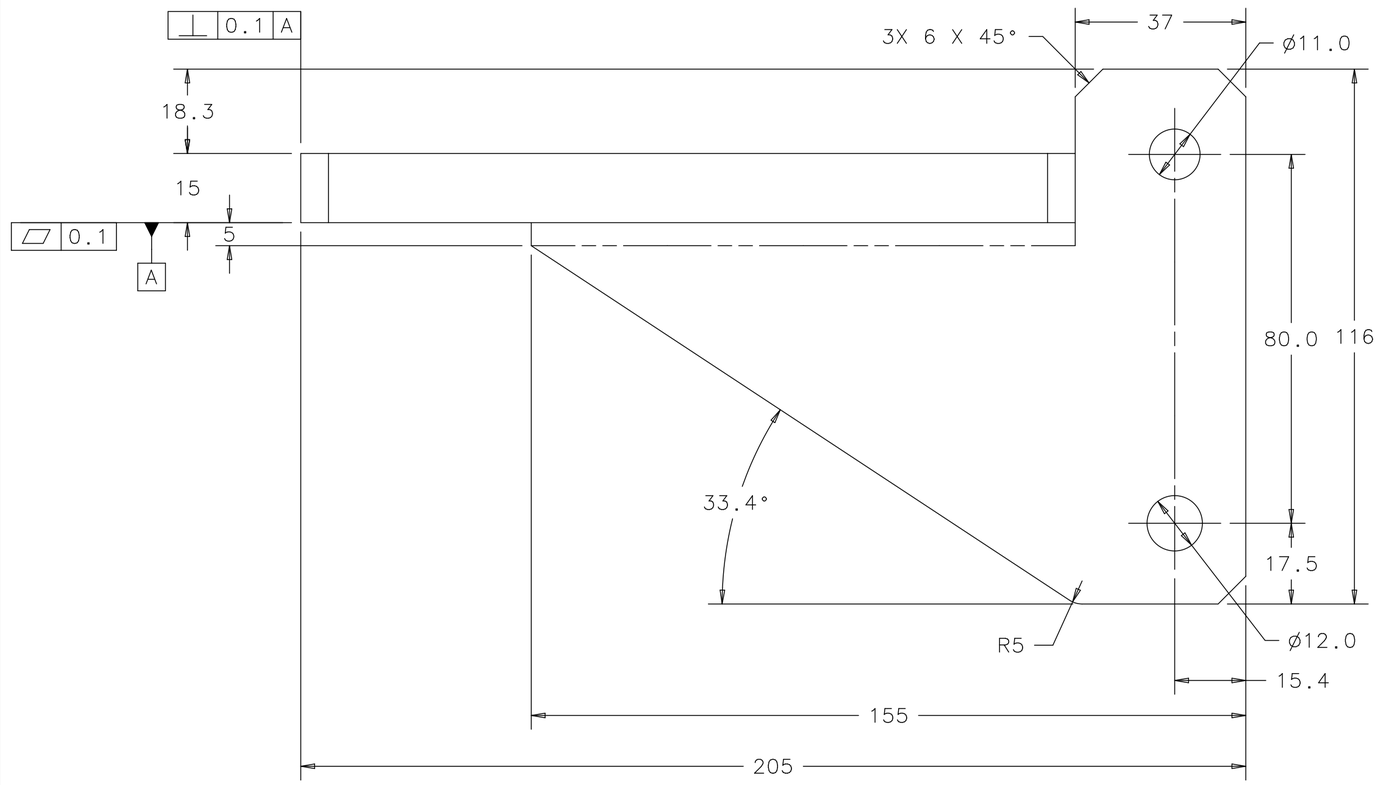

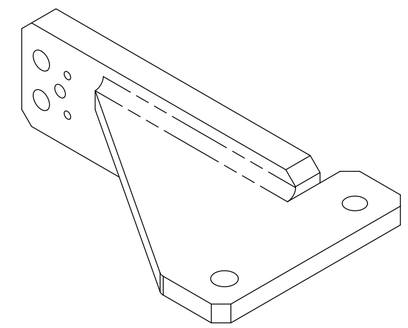

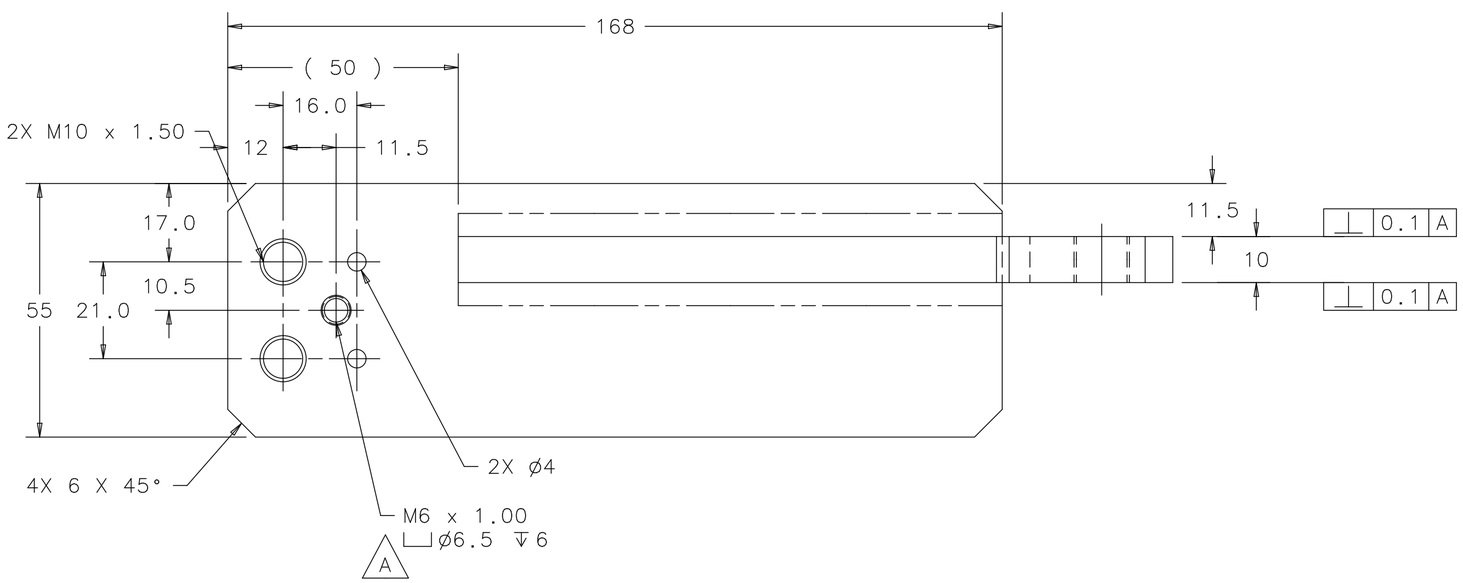

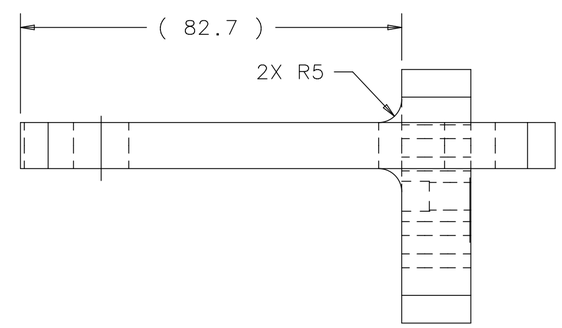

UNLESS OTHERWISE SPECIFIED			ORIGINATOR	M.MCGEE/P.HURH	27-JUL-2011
METRIC	X.X	ANGLES	DRAWN	R.STEWART	27-JUL-2011
± 0.25	± 0.1	± .5°	CHECKED	P.HURH	07-SEP-2011
			APPROVED	M.MCGEE	07-SEP-2011

1. BREAK ALL SHARP EDGES 0.4 MAX.
2. DO NOT SCALE DRAWING.
3. DIMENSIONS BASED UPON ASME Y14.5M-1994
4. MAX. ALL MACH. SURFACES 1.6
5. DRAWING UNITS: METRIC

USED ON: MD-433731

MATERIAL: 6061-T6 ALUMINUM

FERMI NATIONAL ACCELERATOR LABORATORY
UNITED STATES DEPARTMENT OF ENERGY

NOVA-ANU TARGET HALL MEDIUM ENERGY TARGET COOLING RAIL BRACKET UPSTREAM

SCALE	DRAWING NUMBER	SHEET	REV
1:1	8875.112-MC-433768	1 OF 1	A

CREATED WITH : Ideas12NXSeries | GROUP: ACCELERATOR MECH. SUPPT.