REV	DESCRIPTION	DRAWN	DATE
		APPROVED	DATE

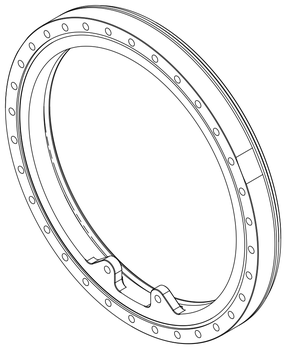

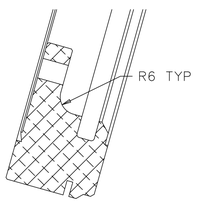

SECTION C-C
SCALE: FULL

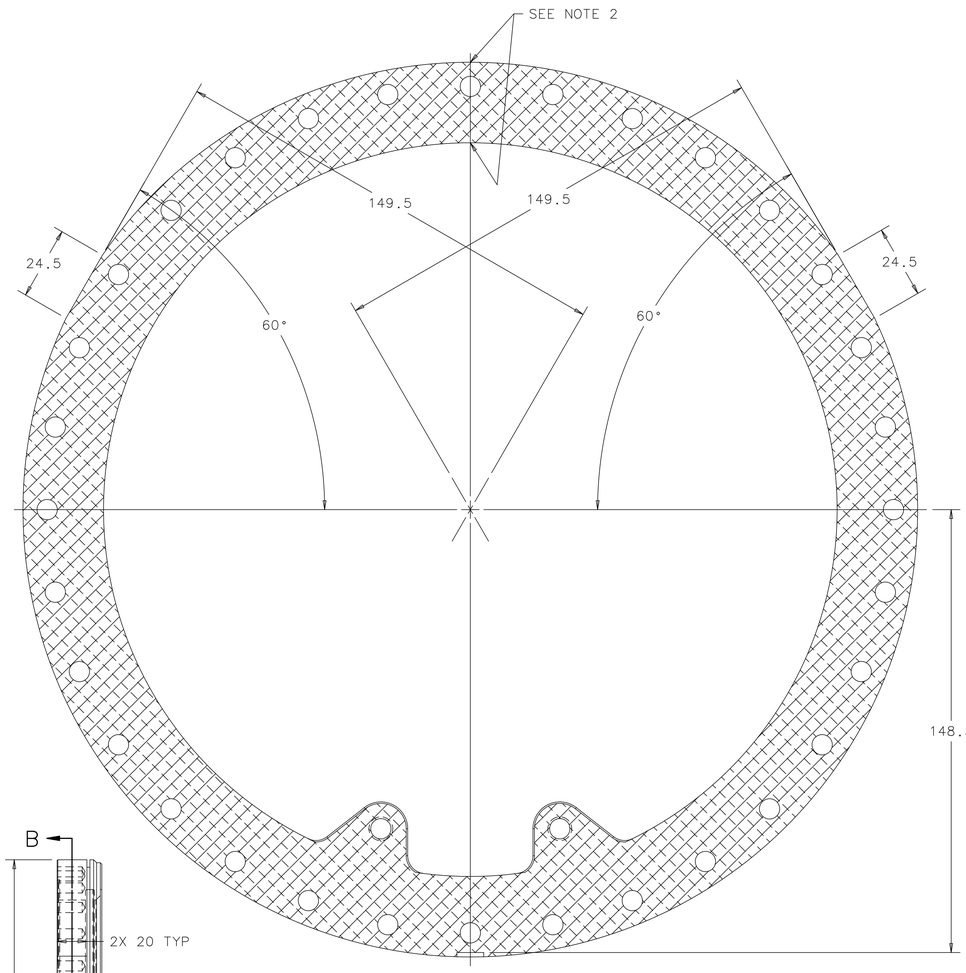

SECTION B-B
SCALE: FULL

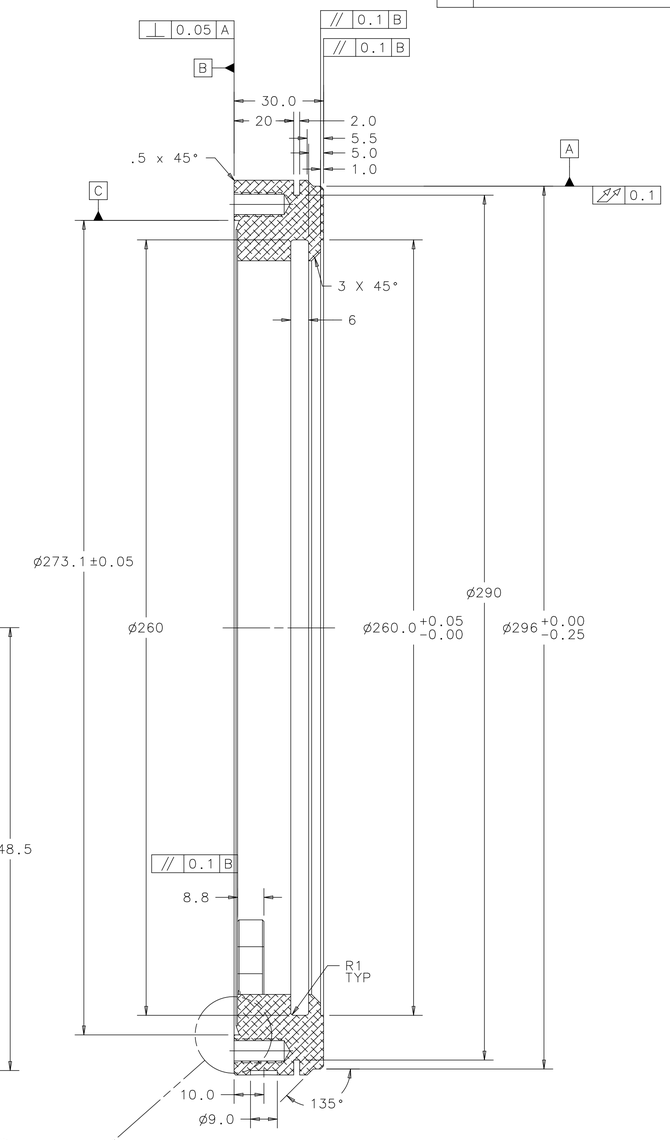

SECTION A-A
SCALE: FULL

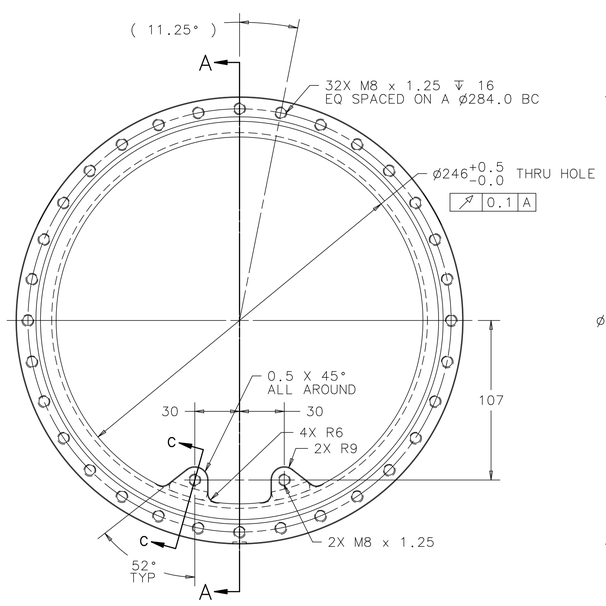

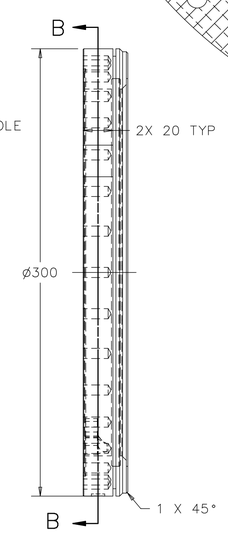

SCALE 4:1

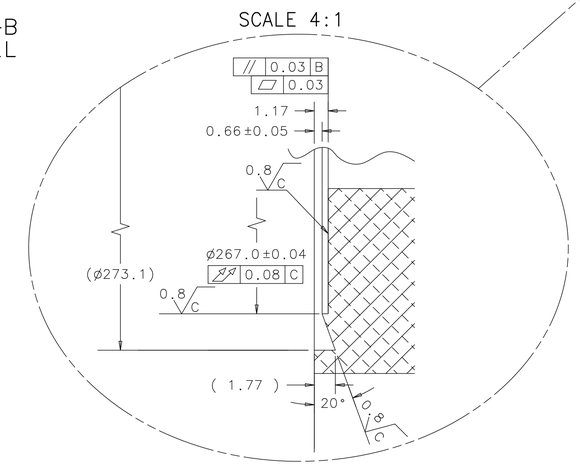

NOTES: 1. VIBRO ETCH DOWNSTREAM ON OUTER SURFACE OF FLANGE
2. VIBRO ETCH 10mm LONG SCRIBE LINES ON THE ID AND OD SURFACE AT THE 90° POSITION.

UNLESS OTHERWISE SPECIFIED			ORIGINATOR	M.MCGEE/P.HURH	22-JUN-2011
METRIC	X.X	ANGLES	DRAWN	R.STEWART	22-JUN-2011
± 0.25	± 0.05	± .5°	CHECKED	P.HURH	08-SEP-2011
1. BREAK ALL SHARP EDGES 0.4 MAX. 2. DO NOT SCALE DRAWING. 3. DIMENSIONS BASED UPON ASME Y14.5M-1994 4. MAX. ALL MACH. SURFACES 1.6 5. DRAWING UNITS: METRIC			APPROVED	M.MCGEE	08-SEP-2011
			USED ON	ME-433753	
			MATERIAL	6061-T651 ALUMINUM	

FERMI NATIONAL ACCELERATOR LABORATORY
UNITED STATES DEPARTMENT OF ENERGY

NOVA-ANU TARGET HALL
MEDIUM ENERGY TARGET
UPSTREAM FLANGE

SCALE	DRAWING NUMBER	SHEET	REV
1:2	8875.112-MD-433757	1 OF 1	

CREATED WITH : Ideas12NXSeries GROUP: ACCELERATOR MECH. SUPPT.