REV	DESCRIPTION	DRAWN	DATE
		APPROVED	DATE

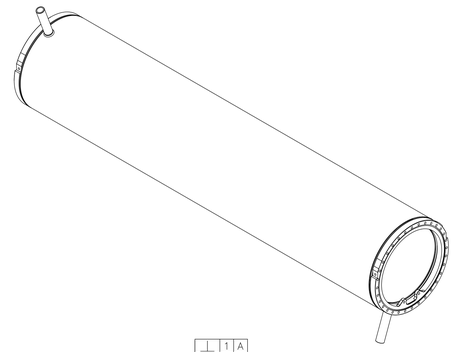

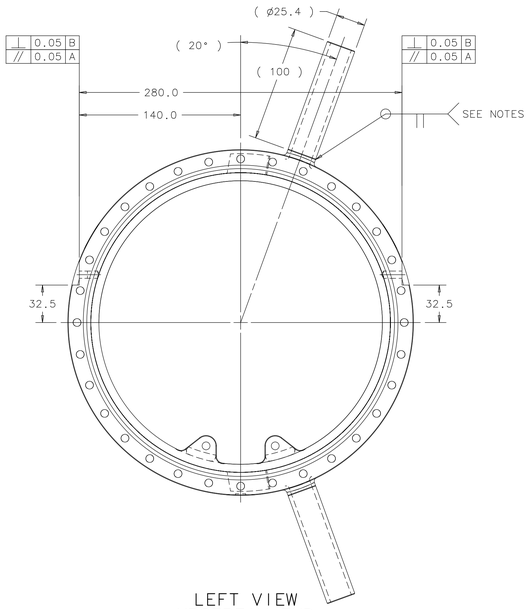

LEFT VIEW
UPSTREAM END
SCALE 1:2

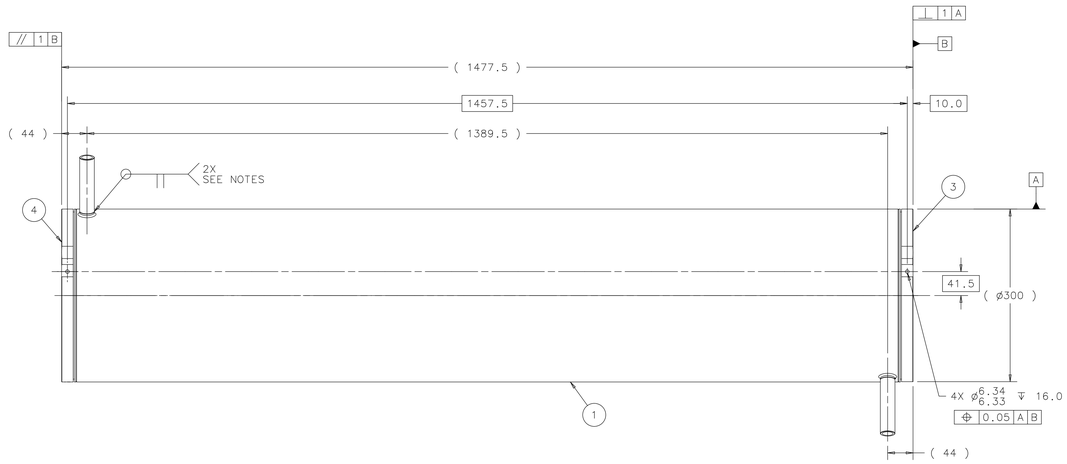

UPSTREAM END

DOWNSTREAM END

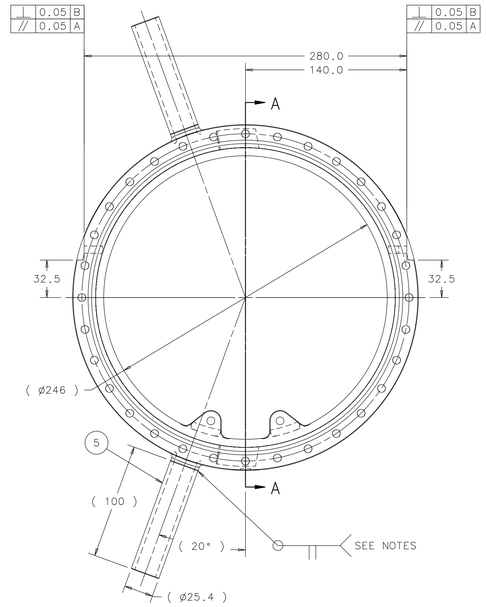

RIGHT VIEW
DOWNSTREAM END
SCALE 1:2

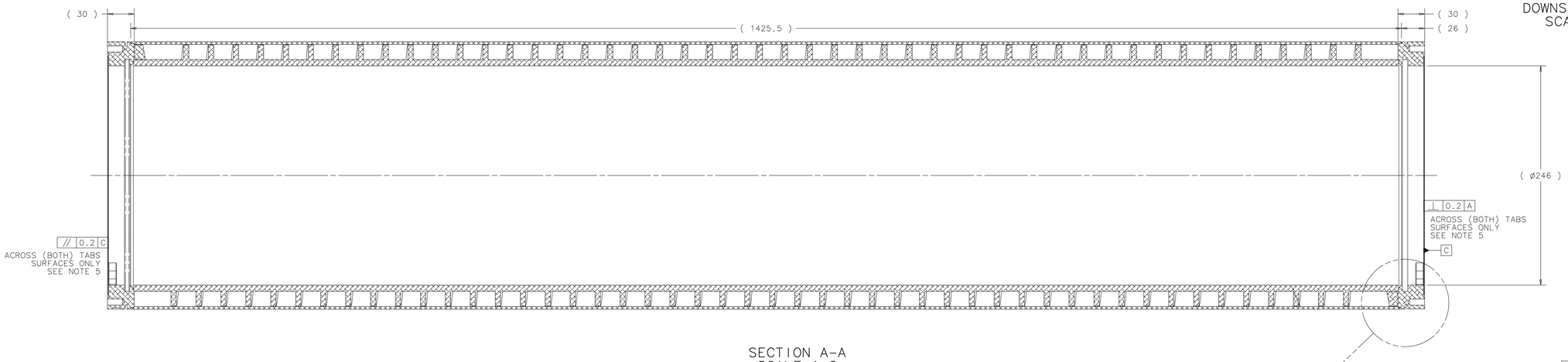

UPSTREAM END

SECTION A-A
SCALE 1:2

DOWNSTREAM END

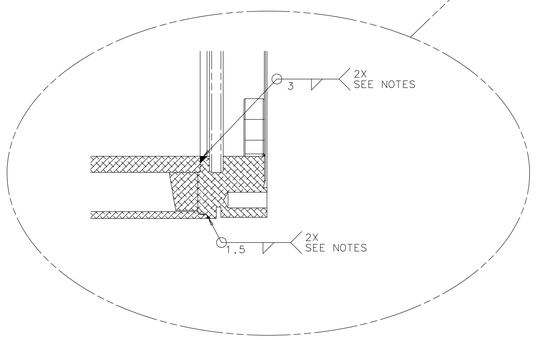

SCALE: FULL

NOTES:
1. USE WELDING ROD ER4043 OR EQUAL FOR ALL WELDING.
2. ALL WELDS TO BE LEAK TESTED AS REQUIRED BY MSD ENGINEERING SPECIFICATION 1320.000-ES-296248
3. MACHINING TO BE DONE AFTER ALL WELDING.
4. SCRIBE LINES ON ITEMS 1,3, AND 4 TO BE USED TO ASSIST IN POSITIONING.
5. SPOT FACING ON TAB FACES TO A DEPTH OF 0.5MM PERMISSIBLE TO ACHIEVE FEATURE CONTROLS.

ITEM	PART NO.	DESCRIPTION OR SIZE	QTY.
5	MB-433758	WATER INLET TUBE	2
4	MD-433757	UPSTREAM FLANGE	1
3	MD-433756	DOWNSTREAM FLANGE	1
2	MD-433755	COOLING INNER TUBE WELDMENT	1
1	MD-433754	COOLING OUTER TUBE	1

PARTS LIST

UNLESS OTHERWISE SPECIFIED			ORIGINATOR	M.MCGEE/P.HURH	13-MAY-2011
METRIC	X.X	ANGLES	DRAWN	R.STEWART	13-MAY-2011
± 0.35	± 0.1	± .5°	CHECKED	P.HURH	08-SEP-2011
1. BREAK ALL SHARP EDGES 0.4 MAX. 2. DO NOT SCALE DRAWING. 3. DIMENSIONS BASED UPON ASME Y14.5M-1994 4. MAX. ALL MACH. SURFACES 1.6 5. DRAWING UNITS: METRIC			APPROVED	M.MCGEE	08-SEP-2011
			USED ON	ME-433791	
			MATERIAL	SEE PARTS LIST ABOVE	

FERMI NATIONAL ACCELERATOR LABORATORY
UNITED STATES DEPARTMENT OF ENERGY

NOVA-ANU TARGET HALL
MEDIUM ENERGY TARGET
COOLING TUBE WELDMENT

SCALE	DRAWING NUMBER	SHEET	REV
1:4	8875.112-ME-433753	1 OF 1	

CREATED WITH : Ideas12NXSeries | GROUP: ACCELERATOR MECH. SUPPT.