REV	DESCRIPTION	DRAWN	DATE
		APPROVED	DATE

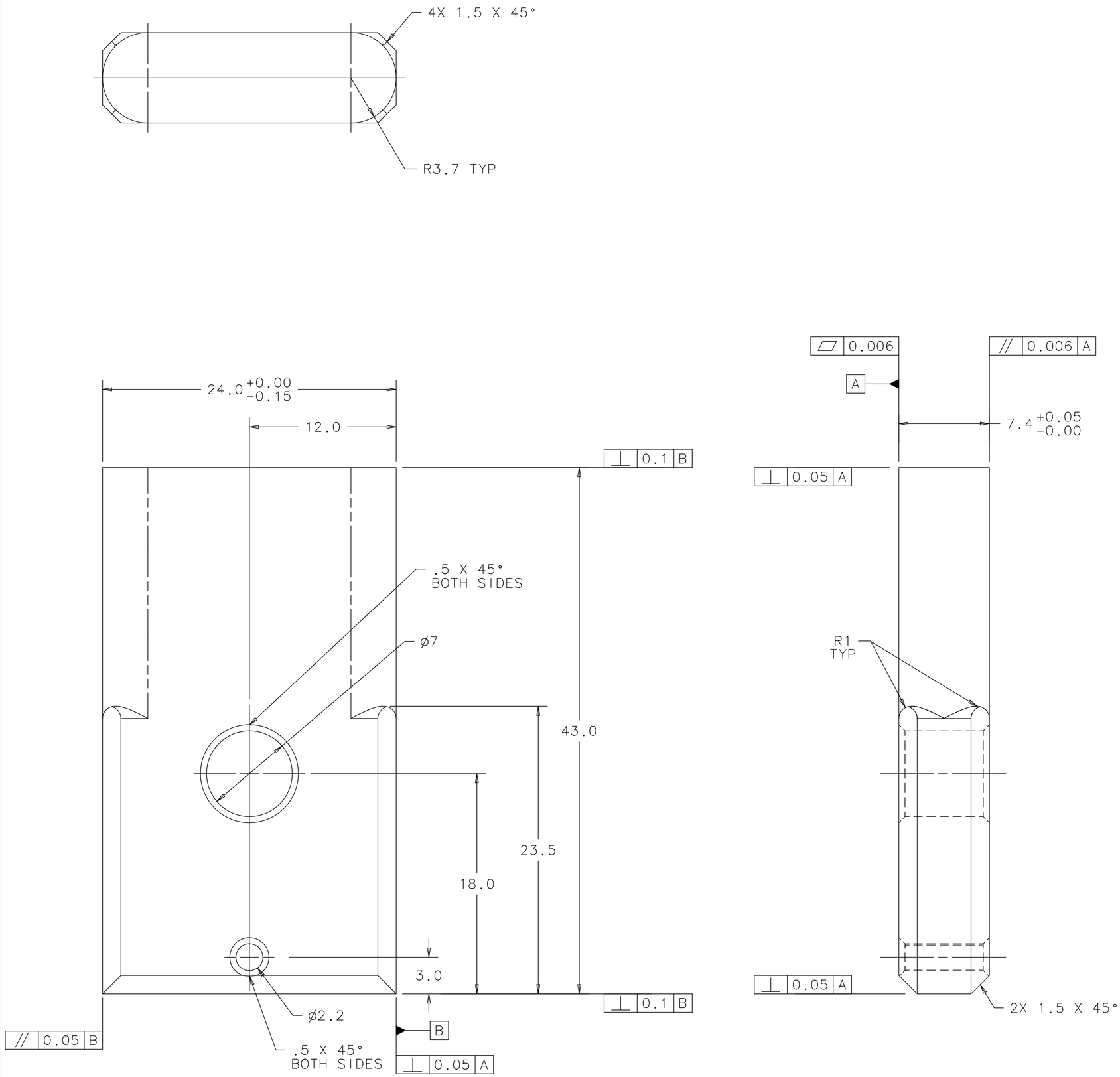

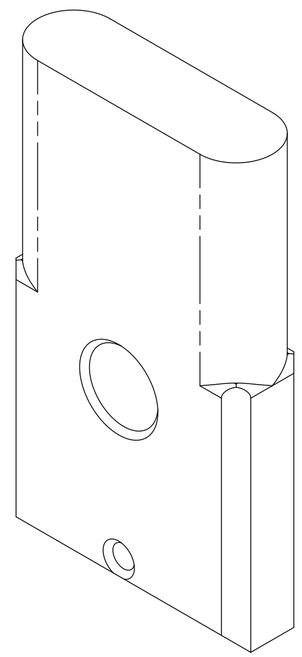

UNLESS OTHERWISE SPECIFIED			ORIGINATOR	M.MCGEE/P.HURH	31-MAY-2011
METRIC	X.X	ANGLES	DRAWN	R.STEWART	31-MAY-2011
± 0.25	± 0.1	± .5°	CHECKED	P.HURH	30-JUN-2011
			APPROVED	M.MCGEE	30-JUN-2011

1. BREAK ALL SHARP EDGES 0.4 MAX.
2. DO NOT SCALE DRAWING.
3. DIMENSIONS BASED UPON ASME Y14.5M-1994
4. MAX. ALL MACH. SURFACES ✓
5. DRAWING UNITS: METRIC

USED ON: MC-433749

MATERIAL: POCO ZXF-5Q GRAPHITE

FERMI NATIONAL ACCELERATOR LABORATORY
UNITED STATES DEPARTMENT OF ENERGY

NOVA-ANU TARGET HALL
MEDIUM ENERGY TARGET
VERTICAL BUDAL TARGET FIN

SCALE	DRAWING NUMBER	SHEET	REV
3:1	8875.112-MC-433751	1 OF 1	

CREATED WITH : Ideas12NXSeries | GROUP: ACCELERATOR MECH. SUPPT.