REV	DESCRIPTION	DRAWN / APPROVED	DATE / DATE
A	ITEM 1 UPDATED, ITEMS 4, 5, 6, AND 7 CHANGED	R.STEWART	10-AUG-2011
		P.HURH	07-SEP-2011
B	ITEMS 1,8 AND 11 UPDATED, ITEM 7 REMOVED, ITEM 11 THRU 14 ADDED, AND NOTE ADDED	R.STEWART	02-NOV-2011
		P.HURH	29-NOV-2011

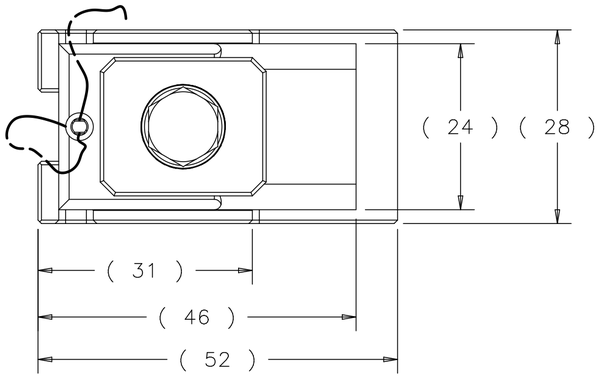

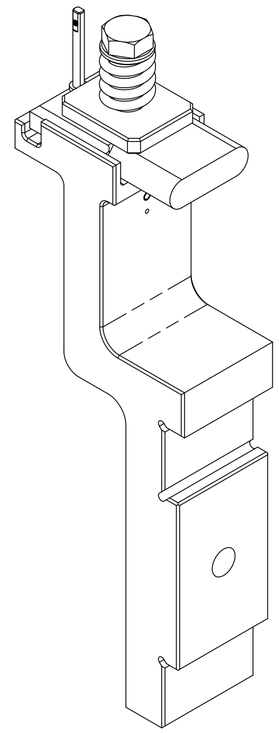

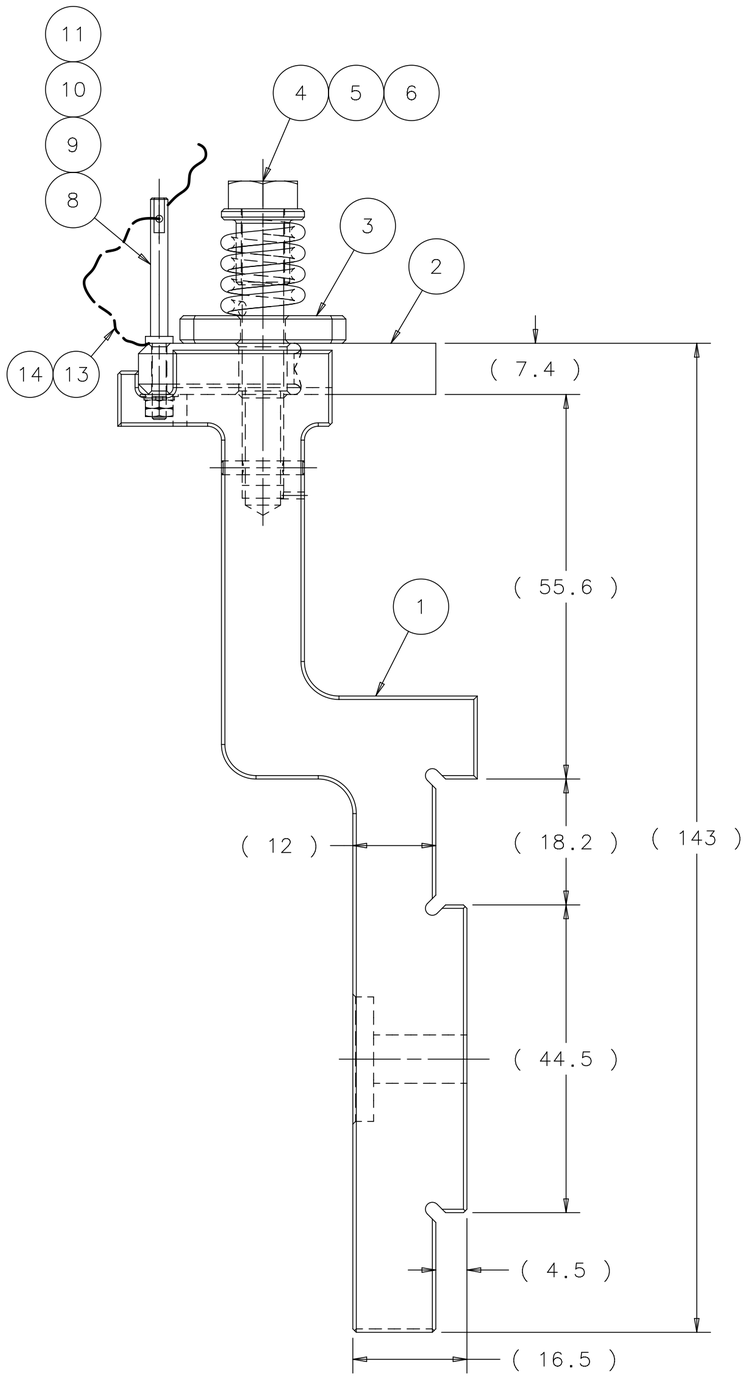

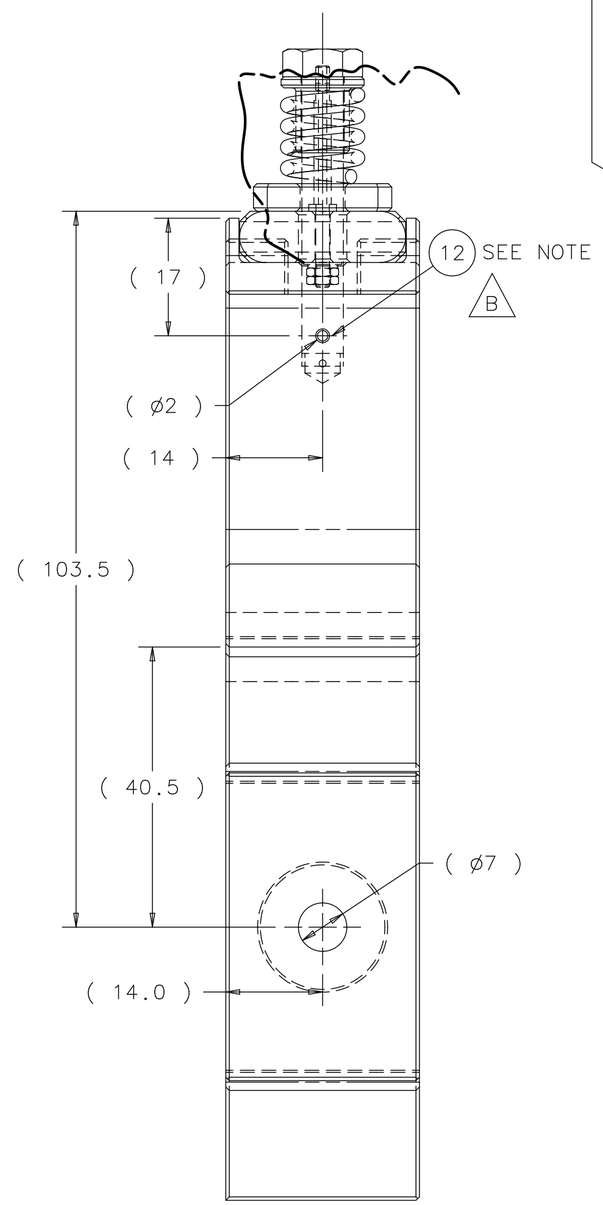

B

NOTE: DRILL AND PIN ITEMS 1 AND 4 FOR A LIGHT PRESS FIT WITH ITEM 11

	ITEM	PART NO.	DESCRIPTION OR SIZE	QTY.
B	14		ø0.8mm 316L WELD WIRE	
	13		COPPER TIN PLATED TERMINAL LUG	2
	12		M2 X 12 LG. ROLL PIN SS	1
B	11		M2 FLAT WASHER ANODIZED 7075-T73 ALUMINUM	1
	10		M2 VENTED LOCK WASHER SS SILVER PLATED UC COMPONETS P/N MLW-02-A OR EQUAL	1
	9		M2 x 0.40 HEX NUT ANODIZED 7075-T73 ALUMINUM	2
B	8	MB-433748	BUDAL CONNECTION ROD	1
B	~~7~~		~~M6 x 1.00 HEX JAM NUT ANODIZED 7075-T73 ALUMINUM~~	~~1~~
A	6		ø12.2 O.D. COMPRESSION SPRING SS LEE SPRING P/N LC 080G 03 S	1
A	5	MC-433799	BUDAL SPRING CENTERING WASHER	1
A	4		M6 x 1.00 X 40 LONG HHCS ANODIZED 7075 ALUMINUM	1
	3	MB-433747	BUDAL FIN PRESSING PLATE	1
	2	MC-433751	VERTICAL BUDAL TARGET FIN	1
B	1	MC-433750	VERTICAL BUDAL FIN BRACKET	1

PARTS LIST

UNLESS OTHERWISE SPECIFIED			ORIGINATOR	M.MCGEE/P.HURH	05-APR-2011
METRIC	X.X	ANGLES	DRAWN	R.STEWART	05-APR-2011
± 0.25	± 0.1	± .5°	CHECKED	P.HURH	30-JUN-2011
			APPROVED	M.MCGEE	30-JUN-2011

1. BREAK ALL SHARP EDGES 0.4 MAX.
2. DO NOT SCALE DRAWING.
3. DIMENSIONS BASED UPON ASME Y14.5M-1994
4. MAX. ALL MACH. SURFACES 1.6
5. DRAWING UNITS: METRIC

USED ON: ME-433790

MATERIAL: SEE PARTS LIST ABOVE

FERMI NATIONAL ACCELERATOR LABORATORY
UNITED STATES DEPARTMENT OF ENERGY

NOVA-ANU TARGET HALL
MEDIUM ENERGY TARGET
VERTICAL BUDAL BRACKET ASSEMBLY

SCALE	DRAWING NUMBER	SHEET	REV
1:1	8875.112-MC-433749	1 OF 1	B

CREATED WITH : Ideas12NXSeries | GROUP: ACCELERATOR MECH. SUPPT.