REV	DESCRIPTION	DRAWN	DATE
		APPROVED	DATE
A	ø2 RELIEF TURNED TO SLOT	R.STEWART	10-AUG-2011
		P.HURH	07-SEP-2011
B	ø2.2 AND ø4.5 HOLE ADDED	R.STEWART	03-NOV-2011
		P.HURH	29-NOV-2011

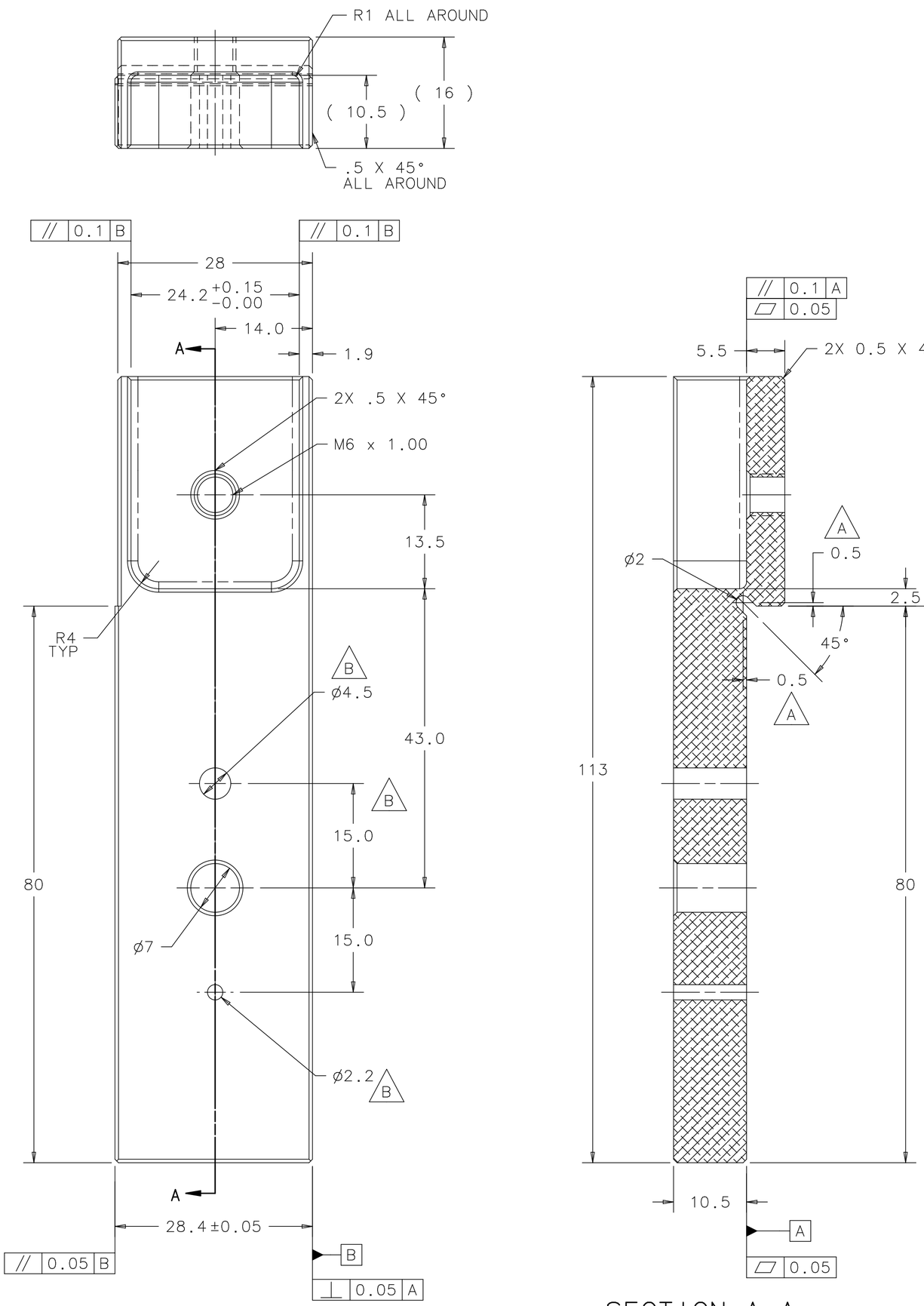

SECTION A-A
SCALE 2:1

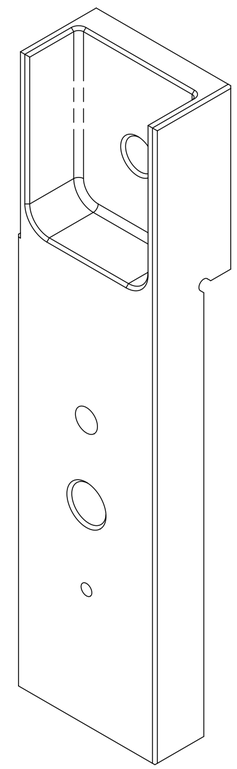

NOTE: HARDCOAT ANODIZE TYPE III CLASS 1 TO 0.025mm - 0.05mm TOTAL LAYER THICKNESS FOLLOWED BY MID-TEMP NICKEL ACETATE SEAL.

UNLESS OTHERWISE SPECIFIED			ORIGINATOR	M.MCGEE/P.HURH	31-MAY-2011
METRIC	X.X	ANGLES	DRAWN	R.STEWART	31-MAY-2011
± 0.25	± 0.1	± .5°	CHECKED	P.HURH	30-JUN-2011
1. BREAK ALL SHARP EDGES 0.4 MAX. 2. DO NOT SCALE DRAWING. 3. DIMENSIONS BASED UPON ASME Y14.5M-1994 4. MAX. ALL MACH. SURFACES 1.6 5. DRAWING UNITS: METRIC			APPROVED	M.MCGEE	30-JUN-2011
			USED ON	MC-433744	
			MATERIAL	6061-T651 ALUMINUM	

FERMI NATIONAL ACCELERATOR LABORATORY
UNITED STATES DEPARTMENT OF ENERGY

NOVA-ANU TARGET HALL MEDIUM ENERGY TARGET HORIZONTAL BUDAL FIN BRACKET

SCALE	DRAWING NUMBER	SHEET	REV
2:1	8875.112-MC-433745	1 OF 1	B

CREATED WITH : Ideas12NXSeries | GROUP: ACCELERATOR MECH. SUPPT.