REV	DESCRIPTION	DRAWN	DATE
		APPROVED	DATE

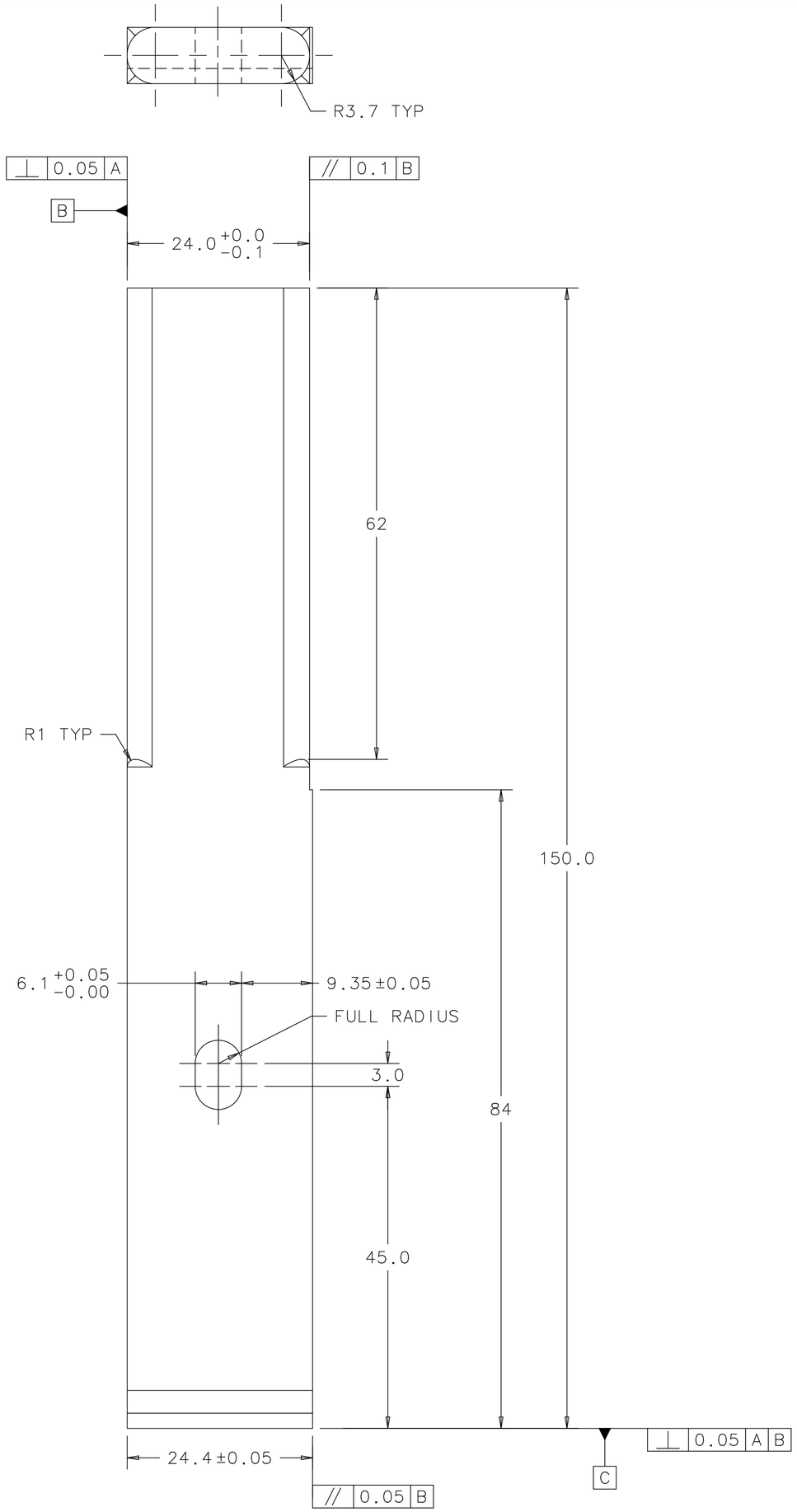

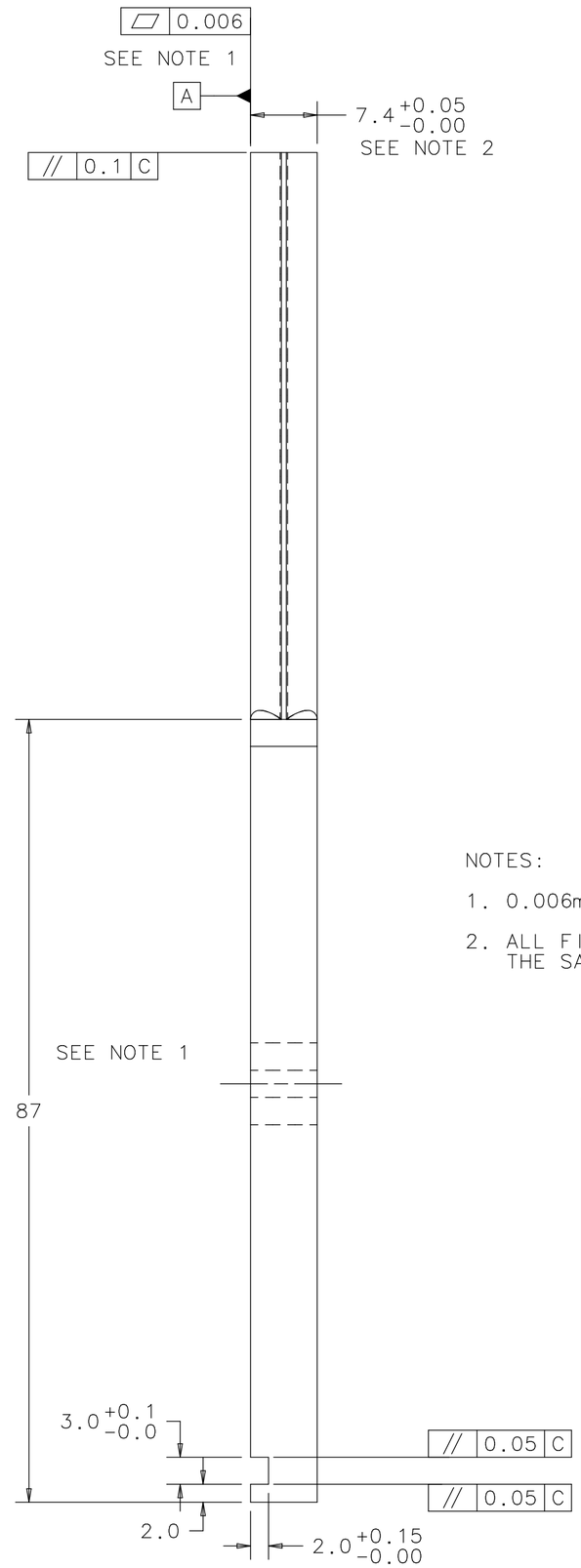

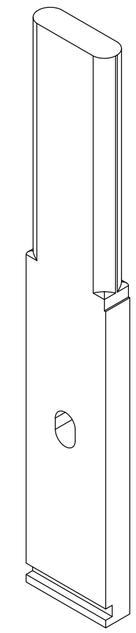

NOTES:

1. 0.006mm FLATNESS TO APPLIED TO DIMENSIONED REGION ONLY
2. ALL FINS (MC-433728, MC-433729, AND MC-433742)SHALL HAVE THE SAME THICKNESS (WITHIN ±.003mm)

UNLESS OTHERWISE SPECIFIED			ORIGINATOR	M.MCGEE/P.HURH	26-APR-2011
METRIC	X.X	ANGLES	DRAWN	R.STEWART	26-APR-2011
± 0.25	± 0.1	± .5	CHECKED	P.HURH	30-JUN-2011
1. BREAK ALL SHARP EDGES 0.4 MAX. 2. DO NOT SCALE DRAWING. 3. DIMENSIONS BASED UPON ASME Y14.5M-1994 4. MAX. ALL MACH. SURFACES 1.6 5. DRAWING UNITS: METRIC			APPROVED	M.MCGEE	30-JUN-2011
			USED ON		
			MATERIAL	POCO ZXF-5Q GRAPHITE	

FERMI NATIONAL ACCELERATOR LABORATORY
UNITED STATES DEPARTMENT OF ENERGY

NOVA-ANU TARGET HALL MEDIUM ENERGY TARGET UPSTREAM TARGET FIN

SCALE	DRAWING NUMBER	SHEET	REV
2:1	8875.112-MC-433742	1 OF 1	

CREATED WITH : Ideas12NXSeries | GROUP: ACCELERATOR MECH. SUPPT.

Created: 14:26:37 on 22-12-11 (D-M-Y) By: rstewart State: 3-RELEASED