REV	DESCRIPTION	DRAWN	DATE
		APPROVED	DATE
A	ø9.0 DIM WAS ø10.7, ø11.15 DIM WAS ø13.0, ø10.83 DIM WAS ø12.6, AND 200 DIM WAS 155	R.STEWART	22-JUL-2011
		P.HURH	07-SEP-2011
B	159 DIMENSION WAS 200	R.STEWART	09-JAN-2012
		P.HURH	02-FEB-2012

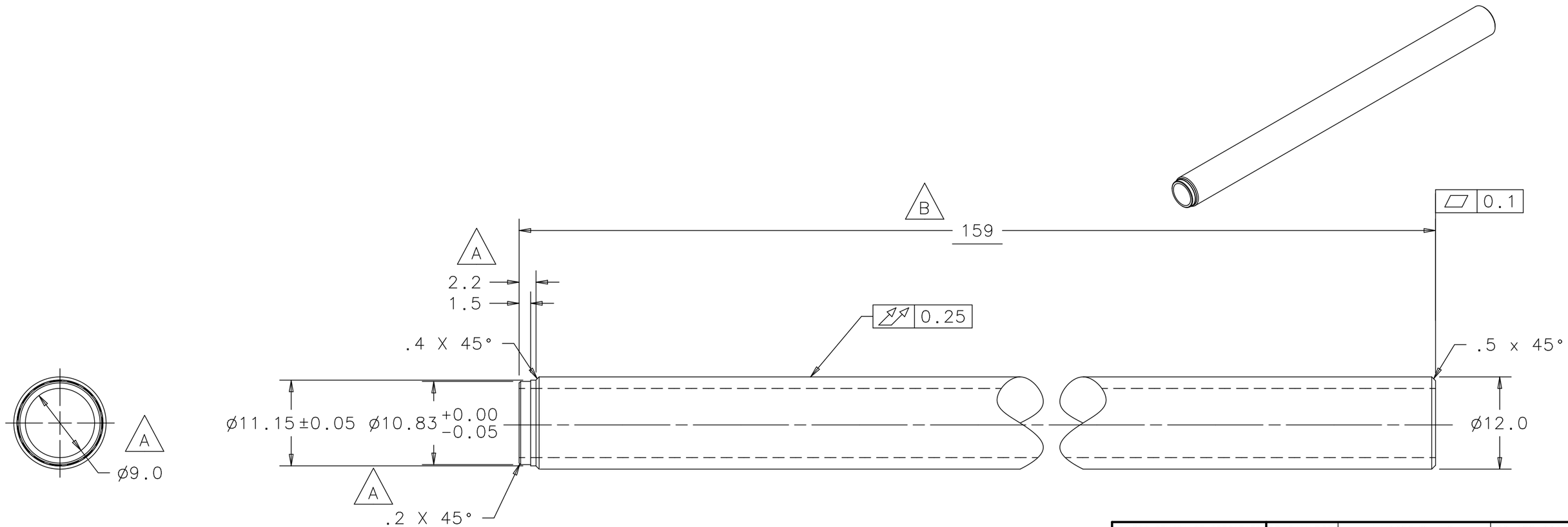

UNLESS OTHERWISE SPECIFIED			ORIGINATOR	M.MCGEE/P.HURH	28-APR-2011
METRIC	X.X	ANGLES	DRAWN	R.STEWART	28-APR-2011
± 0.25	± 0.1	± .5°	CHECKED	P.HURH	08-JUN-2011
1. BREAK ALL SHARP EDGES 0.4 MAX. 2. DO NOT SCALE DRAWING. 3. DIMENSIONS BASED UPON ASME Y14.5M-1994 4. MAX. ALL MACH. SURFACES 1.6 5. DRAWING UNITS: METRIC			APPROVED	M.MCGEE	08-JUN-2011
			USED ON	MD-433732	
			MATERIAL	316L STAINLESS STEEL	

FERMI NATIONAL ACCELERATOR LABORATORY
UNITED STATES DEPARTMENT OF ENERGY

NOVA-ANU TARGET HALL MEDIUM ENERGY TARGET END WALL WATER CONNECTION

SCALE	DRAWING NUMBER	SHEET	REV
2:1	8875.112-MB-433739	1 OF 1	B

CREATED WITH : Ideas12NXSeries | GROUP: ACCELERATOR MECH. SUPPT.

Created: 08:01:17 on 02-02-12 (D-M-Y) By: rstewart State: 1-INITIAL