REV	DESCRIPTION	DRAWN	DATE
		APPROVED	DATE
A	26.5 DIM WAS 28.0, 1.5 DIM WAS 3.0, ø11.0 C'BORE REMOVED, ø10.83 DIM WAS ø12.6, AND ø11.15 DIM WAS ø11.0	R.STEWART	22-JUL-2011
		P.HURH	07-SEP-2011

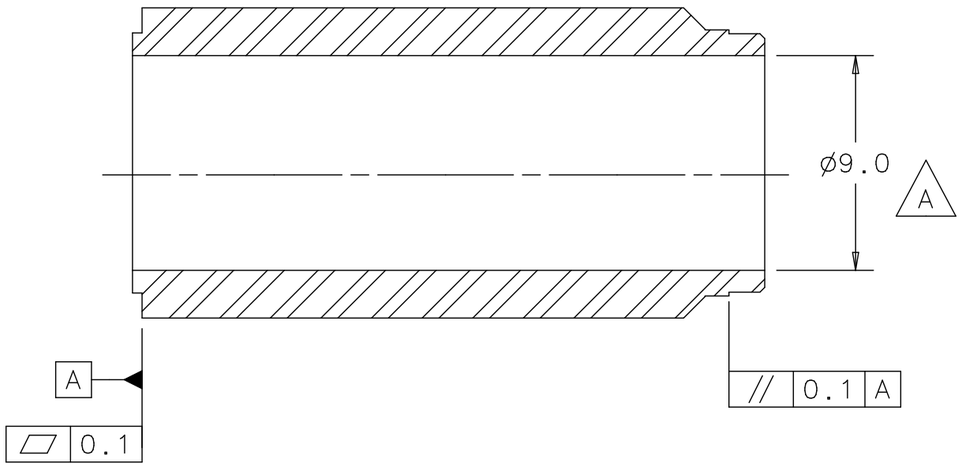

SECTION A-A
SCALE 4:1

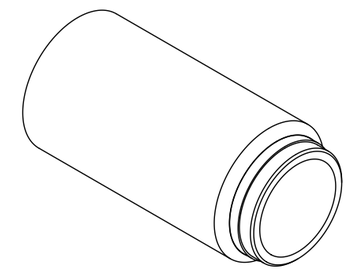

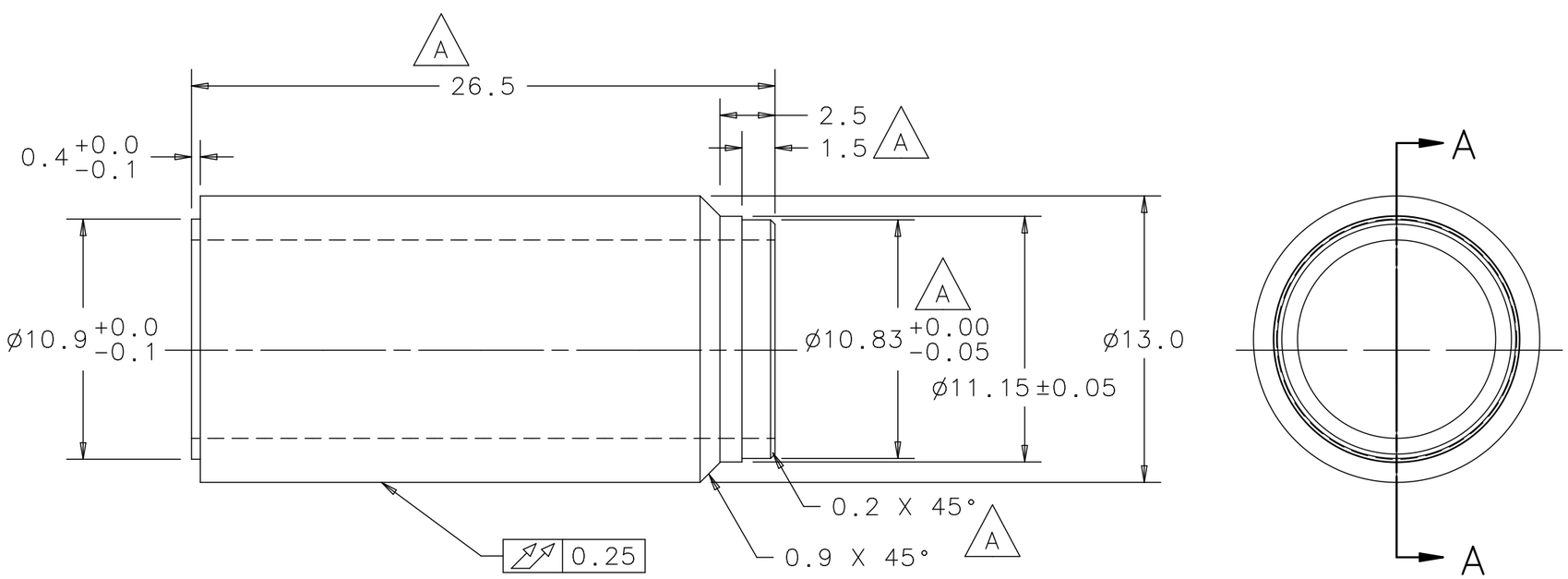

UNLESS OTHERWISE SPECIFIED			ORIGINATOR	M.MCGEE/P.HURH	31-MAR-2011
METRIC	X.X	ANGLES	DRAWN	R.STEWART	31-MAR-2011
± 0.25	± 0.1	± .5°	CHECKED	P.HURH	08-JUN-2011
1. BREAK ALL SHARP EDGES 0.4 MAX. 2. DO NOT SCALE DRAWING. 3. DIMENSIONS BASED UPON ASME Y14.5M-1994 4. MAX. ALL MACH. SURFACES 1.6 5. DRAWING UNITS: METRIC			APPROVED	M.MCGEE	08-JUN-2011
			USED ON	MD-433732	
			MATERIAL	316L STAINLESS STEEL	

FERMI NATIONAL ACCELERATOR LABORATORY
UNITED STATES DEPARTMENT OF ENERGY

NOVA-ANU TARGET HALL MEDIUM ENERGY TARGET TRANSITION BUSHING EXTENSION

SCALE	DRAWING NUMBER	SHEET	REV
4:1	8875.112-MB-433738	1 OF 1	A

CREATED WITH : Ideas12NXSeries GROUP: ACCELERATOR MECH. SUPPT.

Created: 14:42:39 on 22-12-11 (D-M-Y) By: rstewart State: 3-RELEASED