REV	DESCRIPTION	DRAWN	DATE
		APPROVED	DATE
A	ø13.0 DIMENSION ADDED	R.STEWART	09-AUG-2011
		P.HURH	02-AUG-2011

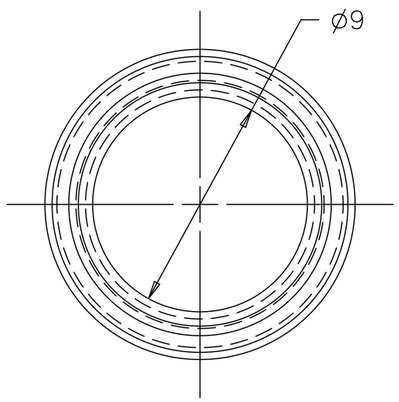

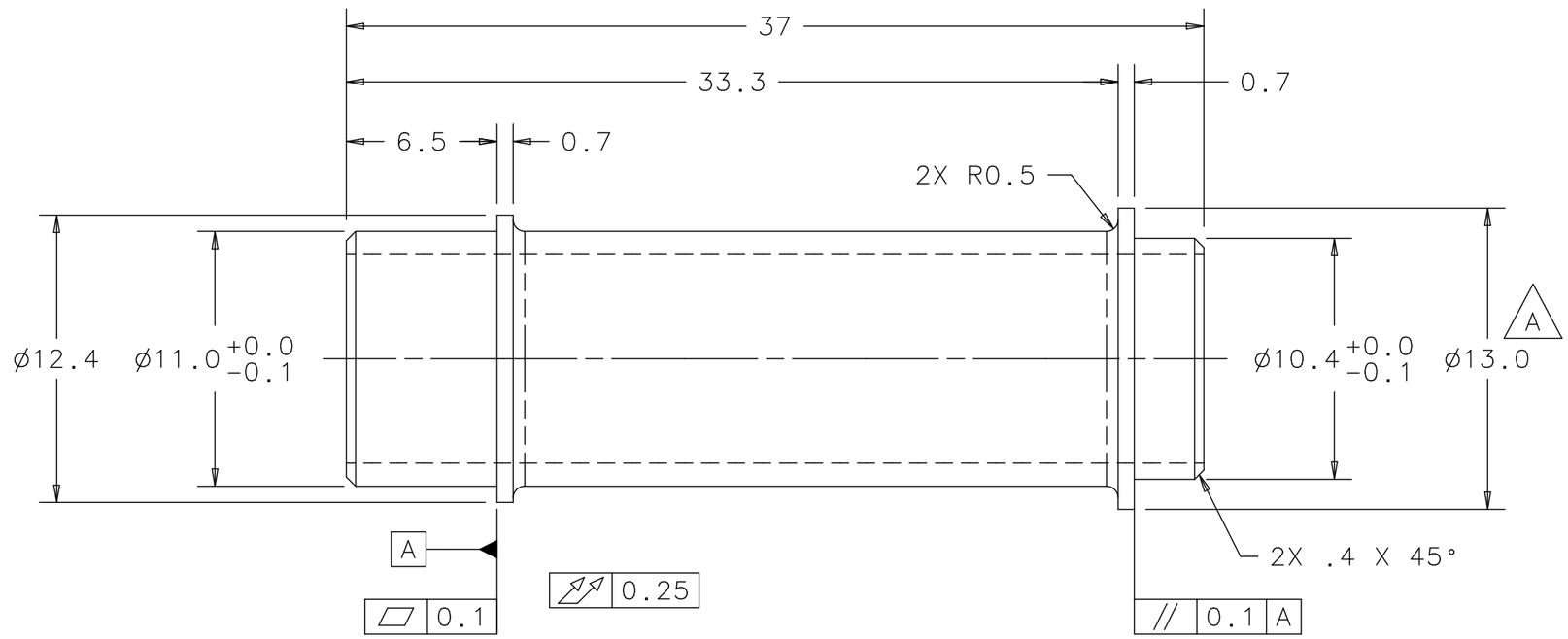

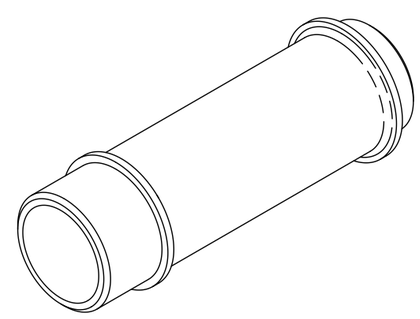

UNLESS OTHERWISE SPECIFIED			ORIGINATOR	M.MCGEE/P.HURH	19-MAY-2011
METRIC	X.X	ANGLES	DRAWN	R.STEWART	19-MAY-2011
± 0.25	± 0.1	± .5°	CHECKED	P.HURH	08-JUN-2011
1. BREAK ALL SHARP EDGES 0.4 MAX.			APPROVED	M.MCGEE	08-JUN-2011
2. DO NOT SCALE DRAWING.			USED ON	MC-433734	
3. DIMENSIONS BASED UPON ASME Y14.5M-1994					
4. MAX. ALL MACH. SURFACES 1.6			MATERIAL	6061-T6 ALUMINUM	
5. DRAWING UNITS: METRIC					

FERMI NATIONAL ACCELERATOR LABORATORY
UNITED STATES DEPARTMENT OF ENERGY

NOVA-ANU TARGET HALL
MEDIUM ENERGY TARGET
COOLING RAIL WATER CONNECTION

SCALE	DRAWING NUMBER	SHEET	REV
4:1	8875.112-MB-433735	1 OF 1	A

CREATED WITH : Ideas12NXSeries | GROUP: ACCELERATOR MECH. SUPPT.