REV	DESCRIPTION	DRAWN / APPROVED	DATE / DATE
A	ITEM 4 CHANGED, ITEMS 3 & 5 UPDATED, AND 1580.6 DIM WAS 1581.1	R.STEWART	22-JUL-2011
		P.HURH	07-SEP-2011
B	ITEM 1 UPDATED	R.STEWART	09-SEP-2011
		P.HURH	12-SEP-2011
C	ITEMS 1,2, AND 5 UPDATED, AND ITEM 3 REMOVED	R.STEWART	09-JAN-2012
		P.HURH	02-FEB-2012

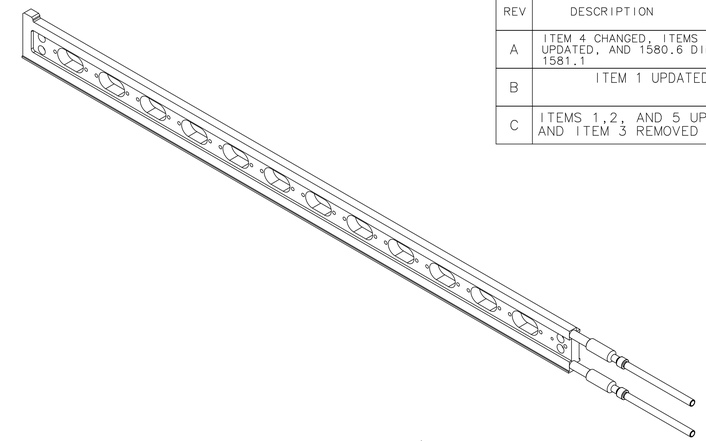

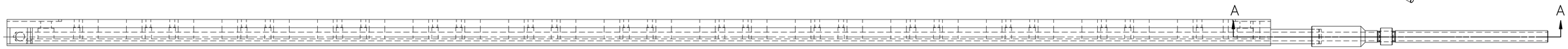

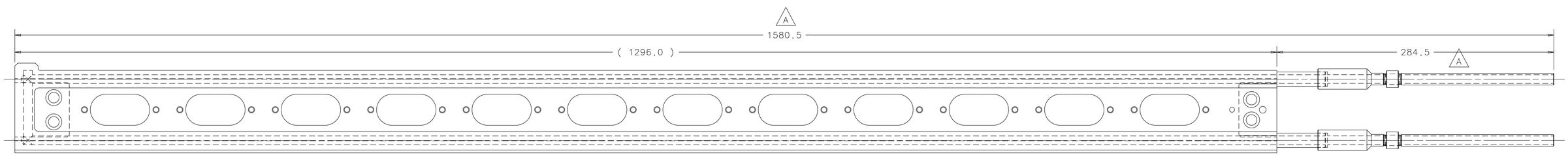

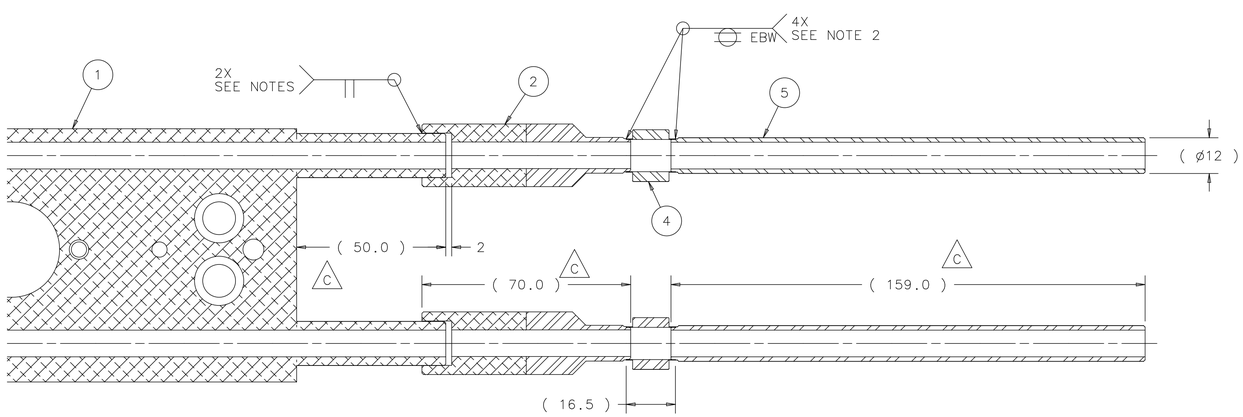

SECTION A-A
SCALE: FULL

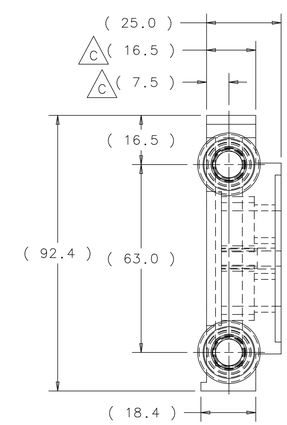

RIGHT VIEW
SCALE: FULL

ITEM	PART NO.	DESCRIPTION OR SIZE	QTY.
5 (C)	MB-433739	ENDWALL WATER CONNETION	2
4 (A)	MINI-FLEX CORP. SS-439-60-134 OR EQ	ø10.9 WELDABLE BELLOWS SS	2
3 (C)	~~MB-433738~~	~~TRANSITION BUSHING EXTENSION~~	~~2~~
2 (C)	MB-433737	TRANSITION BUSHING	2
1 (C)	MD-433733	COOLING RAIL FINAL MACHINE	1

PARTS LIST

UNLESS OTHERWISE SPECIFIED			ORIGINATOR	M.MCGEE/P.HURH	21-APR-2011
METRIC	X.X	ANGLES	DRAWN	R.STEWART	21-APR-2011
± 0.25	± 0.1	± .5°	CHECKED	P.HURH	08-JUN-2011
			APPROVED	M.MCGEE	08-JUN-2011

1. BREAK ALL SHARP EDGES 0.4 MAX.
2. DO NOT SCALE DRAWING.
3. DIMENSIONS BASED UPON ASME Y14.5M-1994
4. MAX. ALL MACH. SURFACES 1.6
5. DRAWING UNITS: METRIC

USED ON: MD-433731

MATERIAL: SEE PARTS LIST ABOVE

FERMI NATIONAL ACCELERATOR LABORATORY
UNITED STATES DEPARTMENT OF ENERGY

NOVA-ANU TARGET HALL MEDIUM ENERGY TARGET COOLING RAIL WELDMENT

SCALE	DRAWING NUMBER	SHEET	REV
1:2	8875.112-MD-433732	1 OF 1	C

CREATED WITH : Ideas12NXSeries GROUP: ACCELERATOR MECH. SUPPT.

NOTES: 1. USE WELDING ROD ER4043 OR EQUAL FOR ALL TIG WELDING.
2. ALL WELDS TO BE LEAK TESTED AS REQUIRED BY MSD ENGINEERING SPECIFICATION 1320.000-ES-296248