| REV | DESCRIPTION | DRAWN / APPROVED | DATE / DATE |
|---|---|---|---|
| A | ITEM 1 UPDATED, ITEMS 2 AND 3 CHANGED, AND 1490.0 DIM WAS 1438 | R.STEWART | 27-JUL-2011 |
| | | P.HURH | 07-SEP-2011 |
| B | ITEMS 1 & 4 UPDATED | R.STEWART | 09-SEP-2011 |
| | | P.HURH | 12-SEP-2011 |
| C | ITEM 4 CHANGED | R.STEWART | 14-NOV-2011 |
| | | P.HURH | 29-NOV-2011 |
| D | ITEM 1 UPDATED | R.STEWART | 24-JAN-2012 |
| | | P.HURH | 02-FEB-2012 |

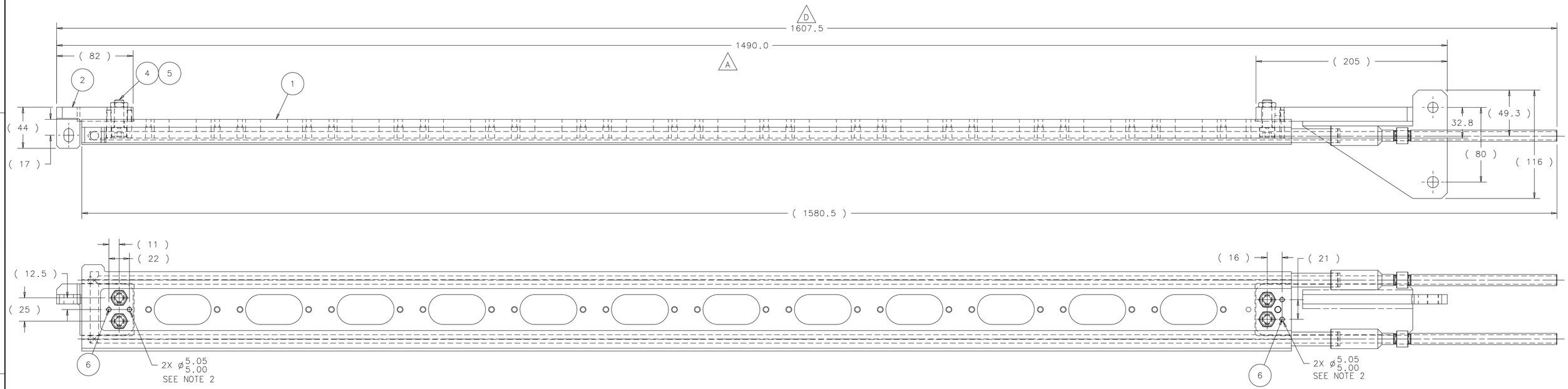


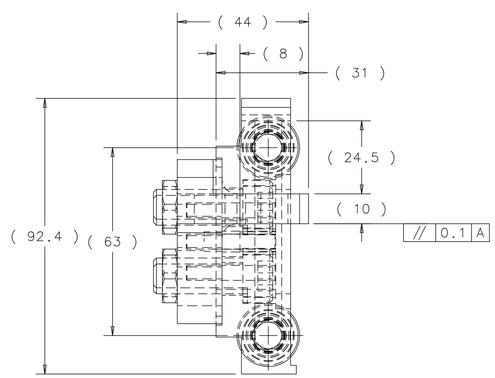


LEFT VIEW
DOWNSTREAM
SCALE: FULL

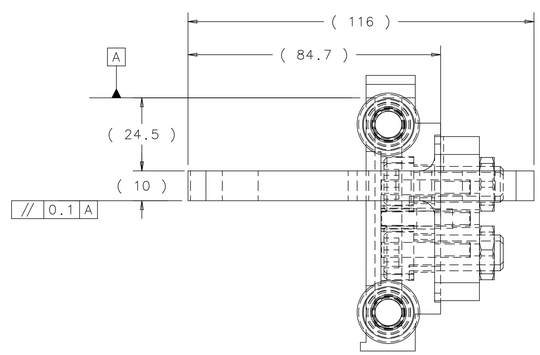


RIGHT VIEW
UPSTREAM
SCALE: FULL

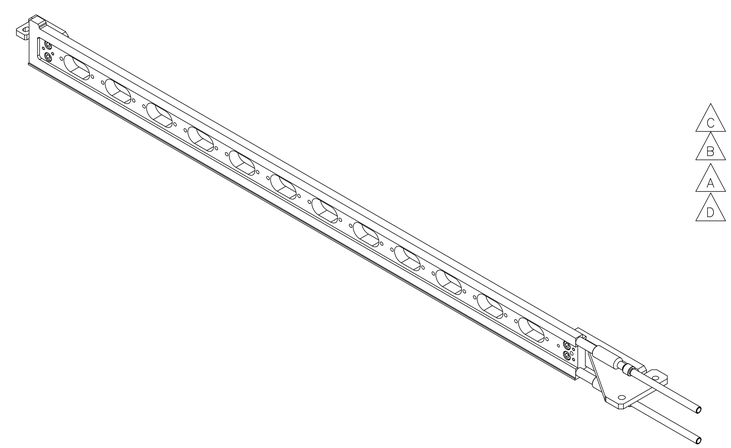

| ITEM | PART NO. | DESCRIPTION OR SIZE | QTY. |
|---|---|---|---|
| 6 | | M5 X 30 LG ROLL PIN SS | 4 |
| 5 | | M10 HEX NUT ANODIZED 7075-T73 ALUMINUM | 4 |
| 4 | MB-433865 | M10 ALUMINUM VENTED SCREW | 4 |
| 3 | MC-433768 | COOLING RAIL BRACKET US | 1 |
| 2 | MB-433767 | COOLING RAIL BRACKET DS | 1 |
| 1 | MD-433732 | TARGET COOLING RAIL WELDMENT | 1 |

PARTS LIST

| UNLESS OTHERWISE SPECIFIED | | | ORIGINATOR | M.MCGEE/P.HURH | 04-MAY-2011 |
|---|---|---|---|---|---|
| METRIC | X.X | ANGLES | DRAWN | R.STEWART | 04-MAY-2011 |
| ± 0.25 | ± 0.1 | ± .5° | CHECKED | P.HURH | 08-JUN-2011 |
| | | | APPROVED | M.MCGEE | 08-JUN-2011 |

1. BREAK ALL SHARP EDGES 0.4 MAX.
2. DO NOT SCALE DRAWING.
3. DIMENSIONS BASED UPON ASME Y14.5M-1994
4. MAX. ALL MACH. SURFACES 1.6
5. DRAWING UNITS: METRIC

USED ON: ME-433790

MATERIAL: SEE PARTS LIST ABOVE

FERMI NATIONAL ACCELERATOR LABORATORY
UNITED STATES DEPARTMENT OF ENERGY

# NOVA-ANU TARGET HALL MEDIUM ENERGY TARGET COOLING RAIL ASSEMBLY

| SCALE | DRAWING NUMBER | SHEET | REV |
|---|---|---|---|
| 1:2 | 8875.112-MD-433731 | 1 OF 1 | D |

CREATED WITH : Ideas12NXSeries GROUP: ACCELERATOR MECH. SUPPT.

NOTES: 1. DATUM A SURFACE TO BE USED TO ALIGN ITEM 1 TO ITEMS(2 AND 3).

2. DRILL HOLES FOR PIN USING PILOT HOLES FROM ITEMS 2 AND 3 AFTER COMPLETELY ALIGNING ASSEMBLY.