REV	DESCRIPTION	DRAWN	DATE
		APPROVED	DATE
A	1346.0 DIM WAS 1296.0, 3MM CHAMFER WAS 1MM, WELD PREP REMOVED, AND DEPTH AND FEATURE CONTROL ADDED TO HOLES	R.STEWART	24-JAN-2012
		P.HURH	02-FEB-2012

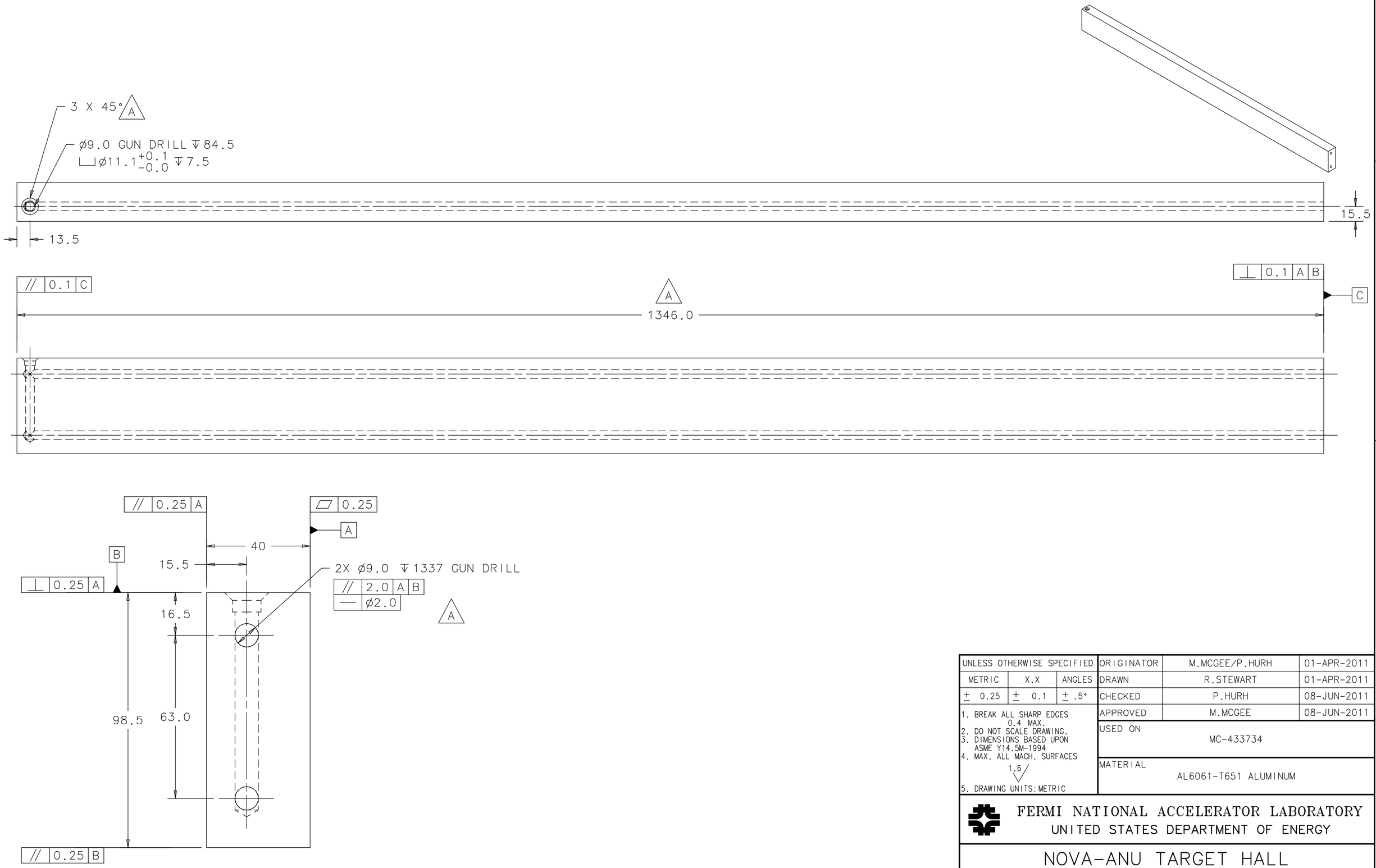

UNLESS OTHERWISE SPECIFIED			ORIGINATOR	M.MCGEE/P.HURH	01-APR-2011
METRIC	X.X	ANGLES	DRAWN	R.STEWART	01-APR-2011
± 0.25	± 0.1	± .5°	CHECKED	P.HURH	08-JUN-2011
1. BREAK ALL SHARP EDGES 0.4 MAX. 2. DO NOT SCALE DRAWING. 3. DIMENSIONS BASED UPON ASME Y14.5M-1994 4. MAX. ALL MACH. SURFACES 1.6 5. DRAWING UNITS: METRIC			APPROVED	M.MCGEE	08-JUN-2011
			USED ON	MC-433734	
			MATERIAL	AL6061-T651 ALUMINUM	

FERMI NATIONAL ACCELERATOR LABORATORY
UNITED STATES DEPARTMENT OF ENERGY

NOVA-ANU TARGET HALL MEDIUM ENERGY TARGET COOLING RAIL ROUGH MACHINE

SCALE	DRAWING NUMBER	SHEET	REV
3:8	8875.112-MC-433725	1 OF 1	A

CREATED WITH : Ideas12NXSeries | GROUP: ACCELERATOR MECH. SUPPT.