REV	DESCRIPTION	DRAWN	DATE
		APPROVED	DATE

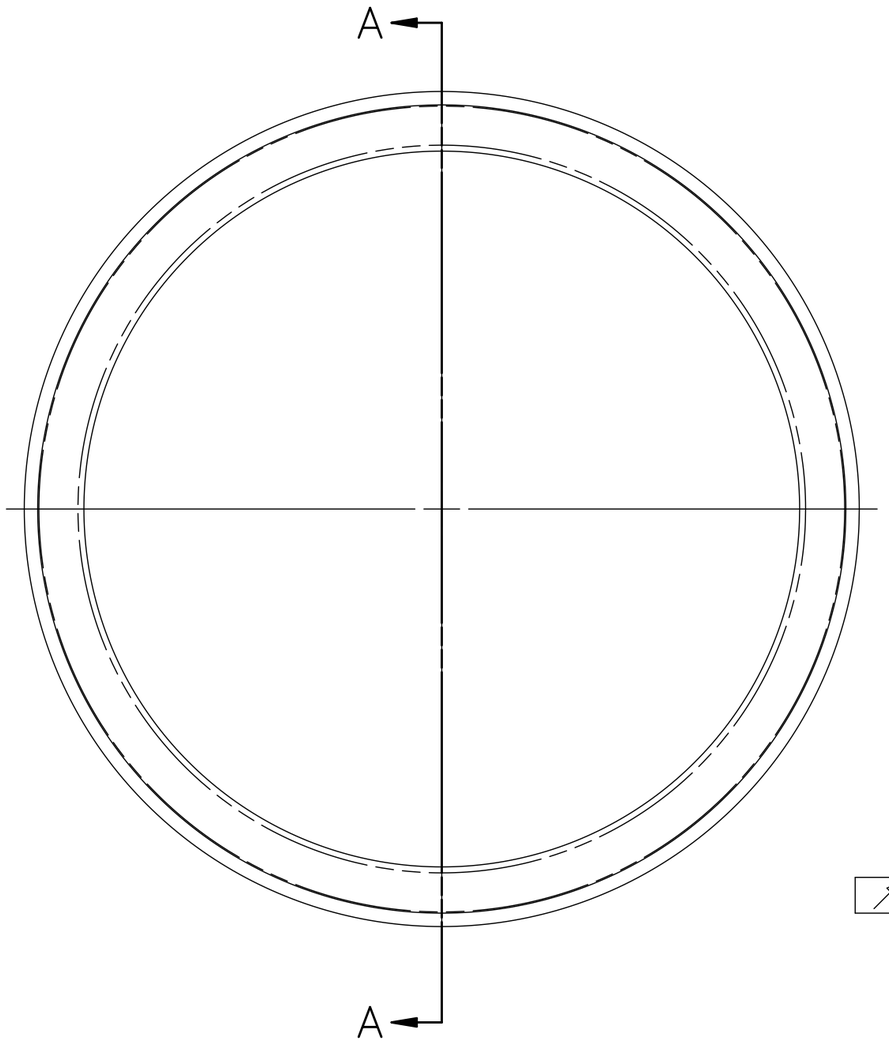

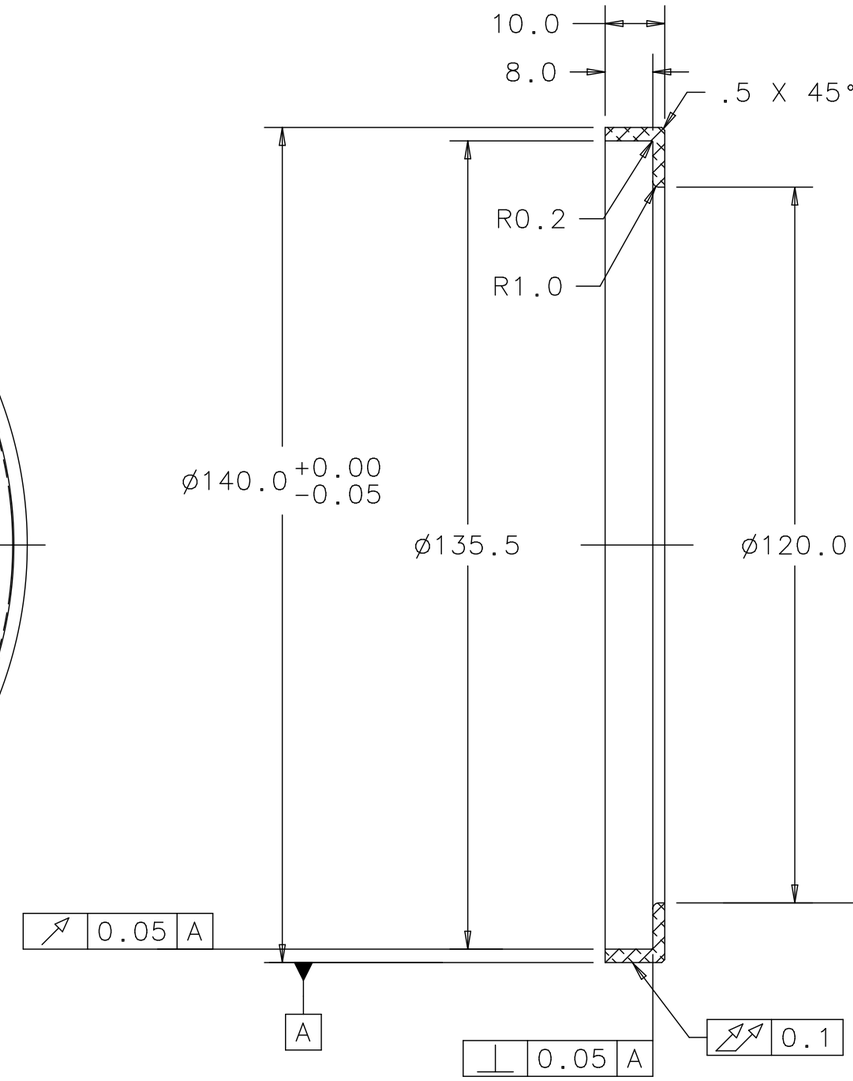

SECTION A-A
SCALE 1:1

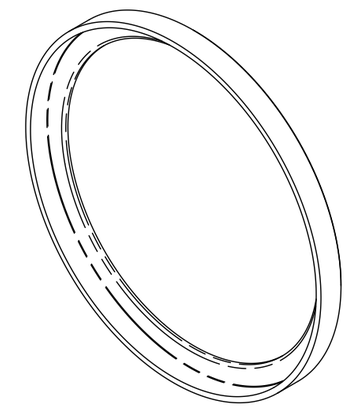

UNLESS OTHERWISE SPECIFIED			ORIGINATOR	M.MCGEE/P.HURH	28-MAR-2011
METRIC	X.X	ANGLES	DRAWN	R.STEWART	28-MAR-2011
± 0.25	± 0.1	± .5°	CHECKED	M.MCGEE	20-JUL-2011
			APPROVED	P.HURH	20-JUL-2011

1. BREAK ALL SHARP EDGES 0.4 MAX.
2. DO NOT SCALE DRAWING.
3. DIMENSIONS BASED UPON ASME Y14.5M-1994
4. MAX. ALL MACH. SURFACES 1.6
5. DRAWING UNITS: METRIC

USED ON: MC-433716

MATERIAL: 6061-T6 ALUMINUM

FERMI NATIONAL ACCELERATOR LABORATORY
UNITED STATES DEPARTMENT OF ENERGY

NOVA-ANU TARGET HALL
MEDIUM ENERGY TARGET
BERYLLIUM MEMBRANE FLANGE

SCALE	DRAWING NUMBER	SHEET	REV
1:1	8875.112-MB-433717	1 OF 1	

CREATED WITH : Ideas12NXSeries | GROUP: ACCELERATOR MECH. SUPPT.

Created: 14:16:18 on 22-12-11 (D-M-Y) By: rstewart State: 3-RELEASED