REV	DESCRIPTION	DRAWN	DATE
		APPROVED	DATE

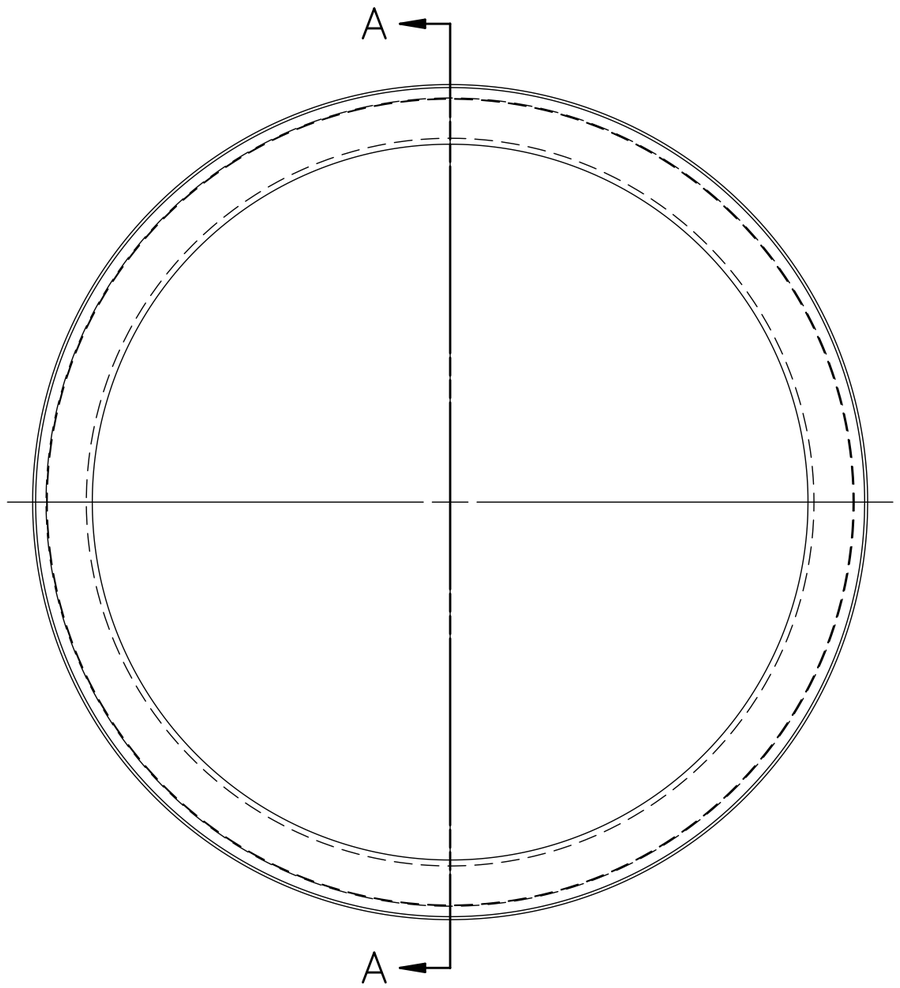

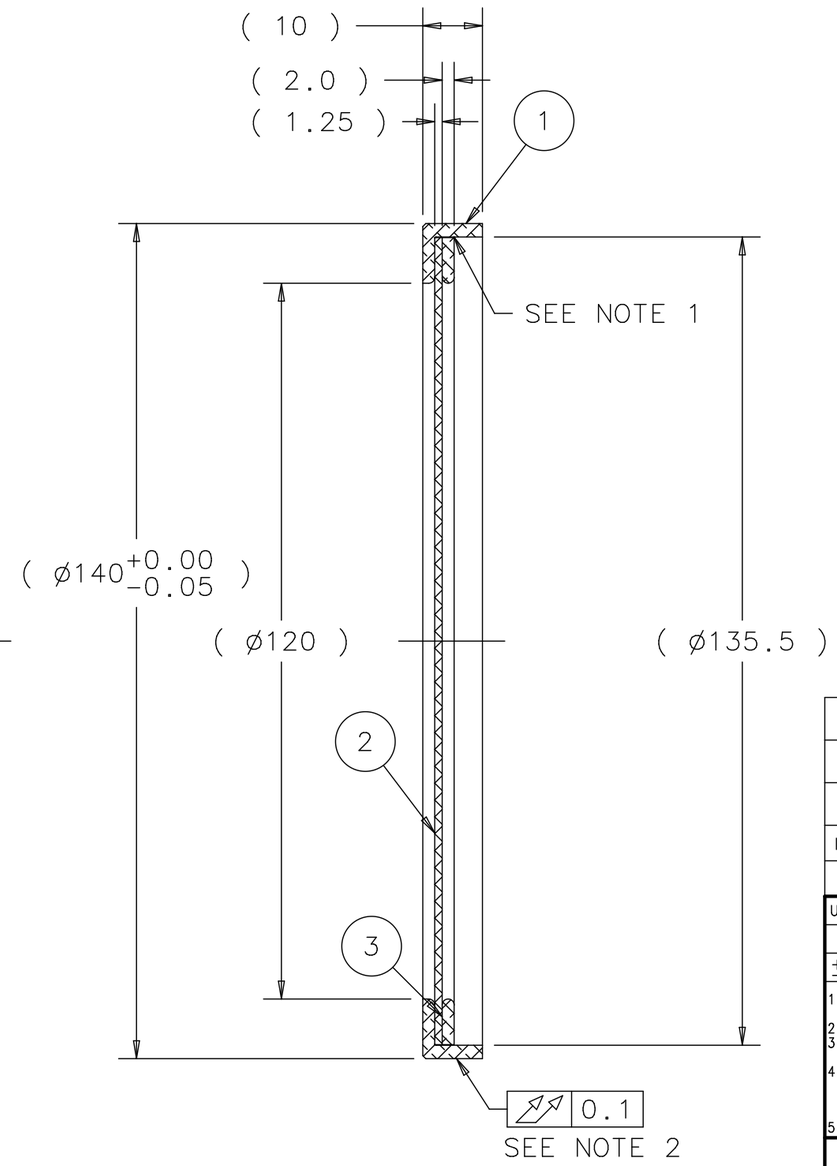

SECTION A-A
SCALE 1:1

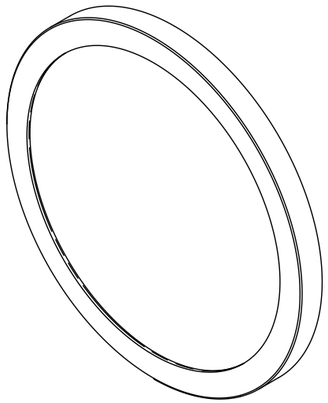

ITEM	PART NO.	DESCRIPTION OR SIZE	QTY.
3	MB-433719	BERYLLIUM MEMBRANE WASHER	1
2	MB-433718	BERYLLIUM MEMBRANE	1
1	MB-433717	BERYLLIUM MEMBRANE FLANGE	1

PARTS LIST

UNLESS OTHERWISE SPECIFIED			ORIGINATOR	M.MCGEE/P.HURH	28-MAR-2011
METRIC	X.X	ANGLES	DRAWN	R.STEWART	28-MAR-2011
± 0.25	± 0.1	± .5°	CHECKED	M.MCGEE	20-JUL-2011
			APPROVED	P.HURH	20-JUL-2011

1. BREAK ALL SHARP EDGES 0.4 MAX.
2. DO NOT SCALE DRAWING.
3. DIMENSIONS BASED UPON ASME Y14.5M-1994
4. MAX. ALL MACH. SURFACES 1.6
5. DRAWING UNITS: METRIC

USED ON: MC-433714

MATERIAL: SEE PARTS LIST ABOVE

FERMI NATIONAL ACCELERATOR LABORATORY
UNITED STATES DEPARTMENT OF ENERGY

NOVA-ANU TARGET HALL MEDIUM ENERGY TARGET BERYLLIUM WINDOW ASSEMBLY

SCALE	DRAWING NUMBER	SHEET	REV
1:1	8875.112-MB-433716	1 OF 1	

CREATED WITH : Ideas12NXSeries | GROUP: ACCELERATOR MECH. SUPPT.

NOTES:
1. JOIN TO A HERMETIC SEAL
2. CLEAN UP AFTER WELDING, IF NECESSARY

Created: 14:15:47 on 22-12-11 (D-M-Y) By: rstewart State: 3-RELEASED