REV	DESCRIPTION	DRAWN	DATE
		APPROVED	DATE

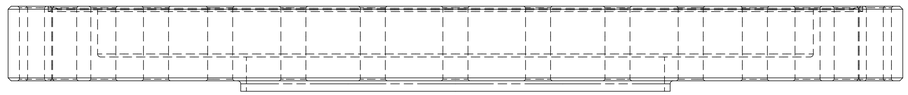

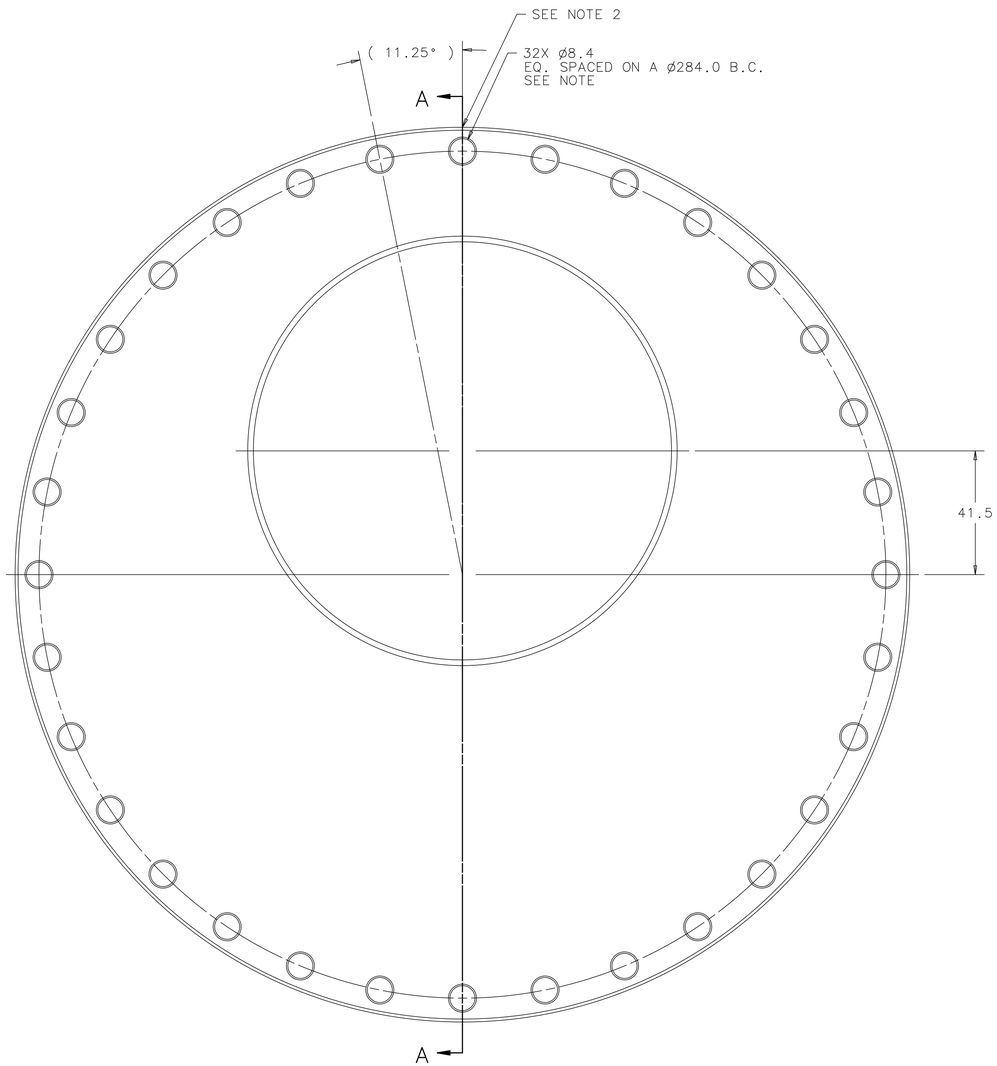

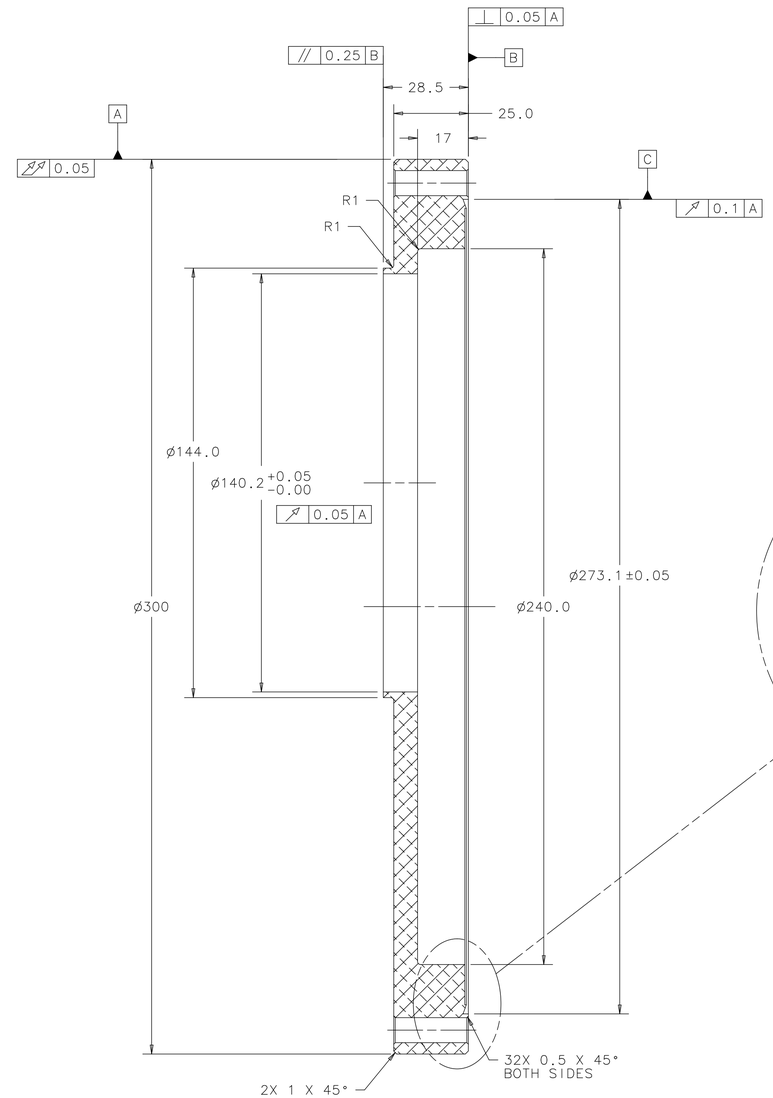

SECTION A-A
SCALE FULL

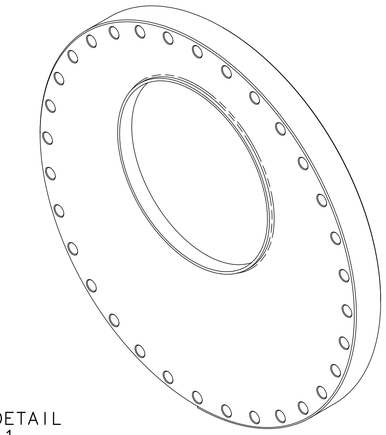

KNIFE EDGE DETAIL
SCALE 2:1
SEE NOTE

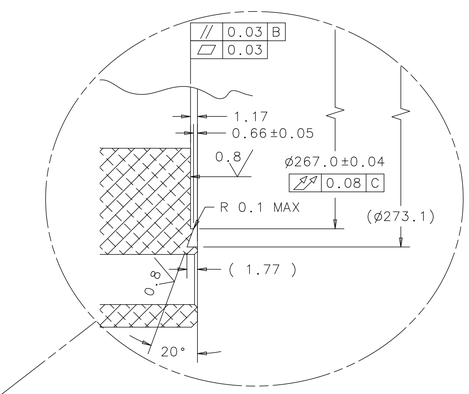

NOTES: 1. VIBRO ETCH DOWNSTREAM ON OUTER SURFACE OF FLANGE

2. VIBRO ETCH 10mm LONG SCRIBE LINES ON THE OD SURFACE AT THE 90° POSITION.

3. END WALL CAN BE MADE FROM AN ALUMINUM NOR CAL PRODUCTS 12" O.D.(304.8mm) NONROTATABLE BLANK CF FLANGE

UNLESS OTHERWISE SPECIFIED			ORIGINATOR	M.MCGEE/P.HURH	29-MAR-2011
METRIC	X.X	ANGLES	DRAWN	R.STEWART	29-MAR-2011
± 0.25	± 0.1	± .5°	CHECKED	M.MCGEE	20-JUL-2011
1. BREAK ALL SHARP EDGES 0.4 MAX. 2. DO NOT SCALE DRAWING. 3. DIMENSIONS BASED UPON ASME Y14.5M-1994 4. MAX. ALL MACH. SURFACES 1.6 5. DRAWING UNITS: METRIC			APPROVED	P.HURH	20-JUL-2011
			USED ON	MC-433714	
			MATERIAL	6061-T6 ALUMINUM	

FERMI NATIONAL ACCELERATOR LABORATORY
UNITED STATES DEPARTMENT OF ENERGY

NOVA-ANU TARGET HALL
MEDIUM ENERGY TARGET
DOWNSTREAM END WALL

SCALE	DRAWING NUMBER	SHEET	REV
1:1	8875.112-MD-433715	1 OF 1	

CREATED WITH : Ideas12NXSeries GROUP: ACCELERATOR MECH. SUPPT.

Created: 14:15:25 on 22-12-11 (D-M-Y) By: rstewart State: 1-INITIAL