REV	DESCRIPTION	DRAWN	DATE
		APPROVED	DATE

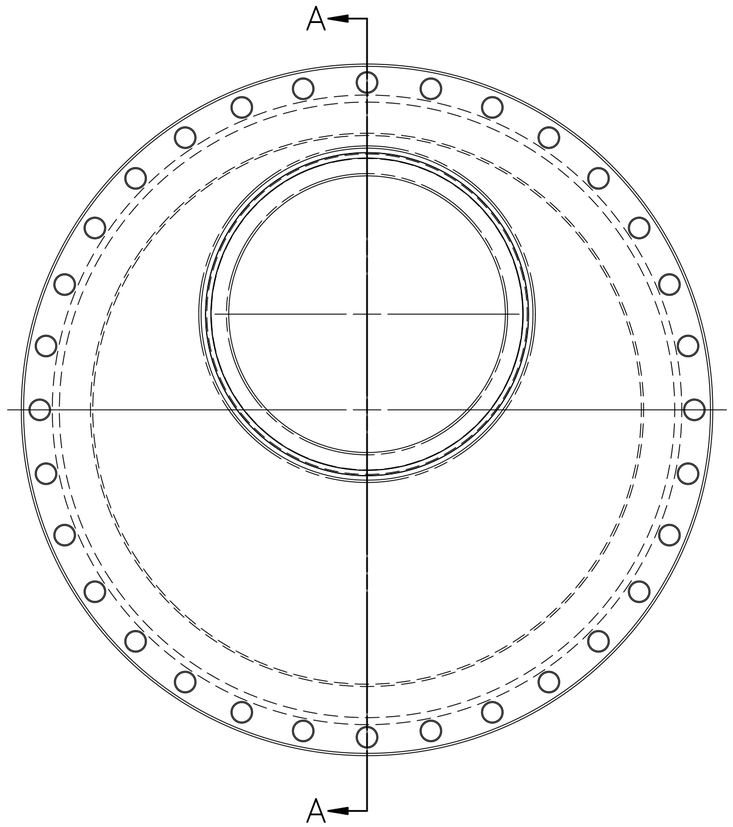

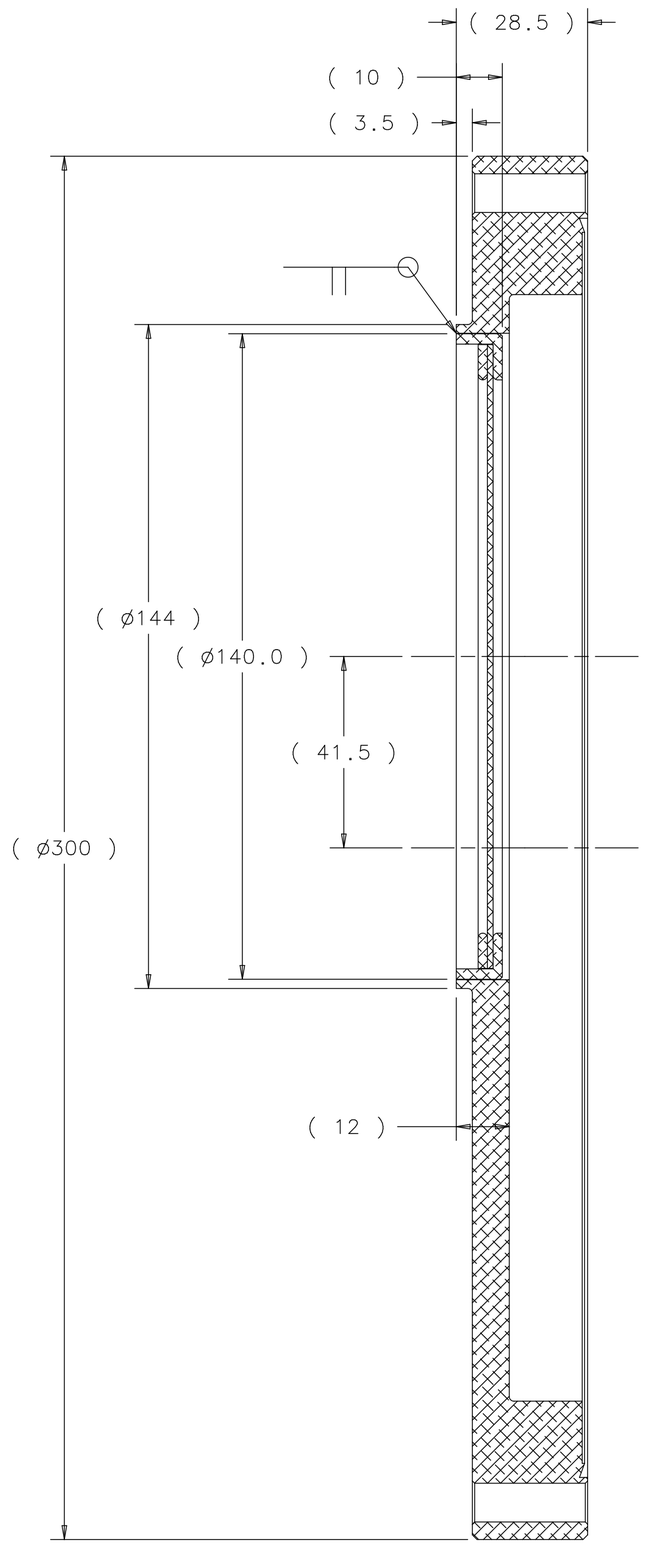

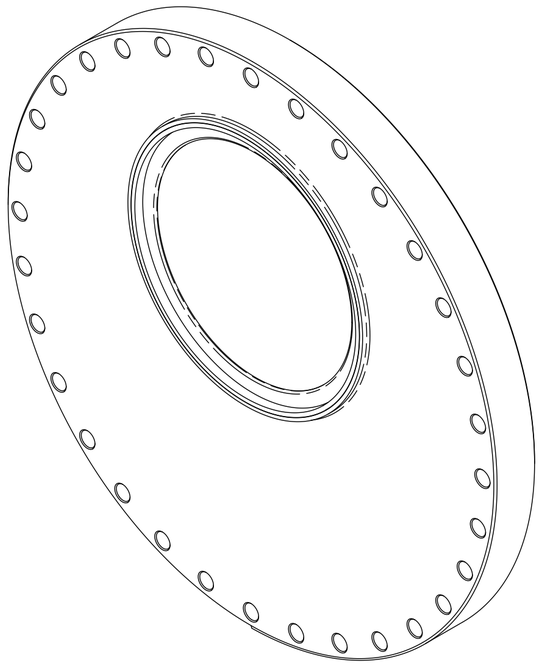

SECTION A-A
SCALE: FULL

NOTE: LEAK TEST TO BE DETECTABLE ON THE MOST SENSITIVE SCALE OF A HELIUM LEAK DETECTOR WITH A MINIMUM SENSITIVITY OF 10 TORR^{-7}L/S FOR HELIUM

ITEM	PART NO.	DESCRIPTION OR SIZE	QTY.
2	MC-433716	BERYLLIUM WINDOW ASSEMBLY	1
1	MD-433715	DOWNSTREAM END WALL	1

PARTS LIST

UNLESS OTHERWISE SPECIFIED			ORIGINATOR	M.MCGEE/P.HURH	28-MAR-2011
METRIC	X.X	ANGLES	DRAWN	R.STEWART	28-MAR-2011
± 0.25	± 0.1	± .5°	CHECKED	M.MCGEE	20-JUL-2011
			APPROVED	P.HURH	20-JUL-2011

1. BREAK ALL SHARP EDGES 0.4 MAX.
2. DO NOT SCALE DRAWING.
3. DIMENSIONS BASED UPON ASME Y14.5M-1994
4. MAX. ALL MACH. SURFACES 1.6
5. DRAWING UNITS: METRIC

USED ON

MATERIAL
SEE PARTS LIST ABOVE

FERMI NATIONAL ACCELERATOR LABORATORY
UNITED STATES DEPARTMENT OF ENERGY

NOVA-ANU TARGET HALL
MEDIUM ENERGY TARGET
DOWNSTREAM END WALL ASSEMBLY

SCALE	DRAWING NUMBER	SHEET	REV
1:2	8875.112-MC-433714	1 OF 1	

CREATED WITH : Ideas12NXSeries | GROUP: ACCELERATOR MECH. SUPPT.