REV.	DESCRIPTION	DRAWN	DATE
		APPD.	DATE

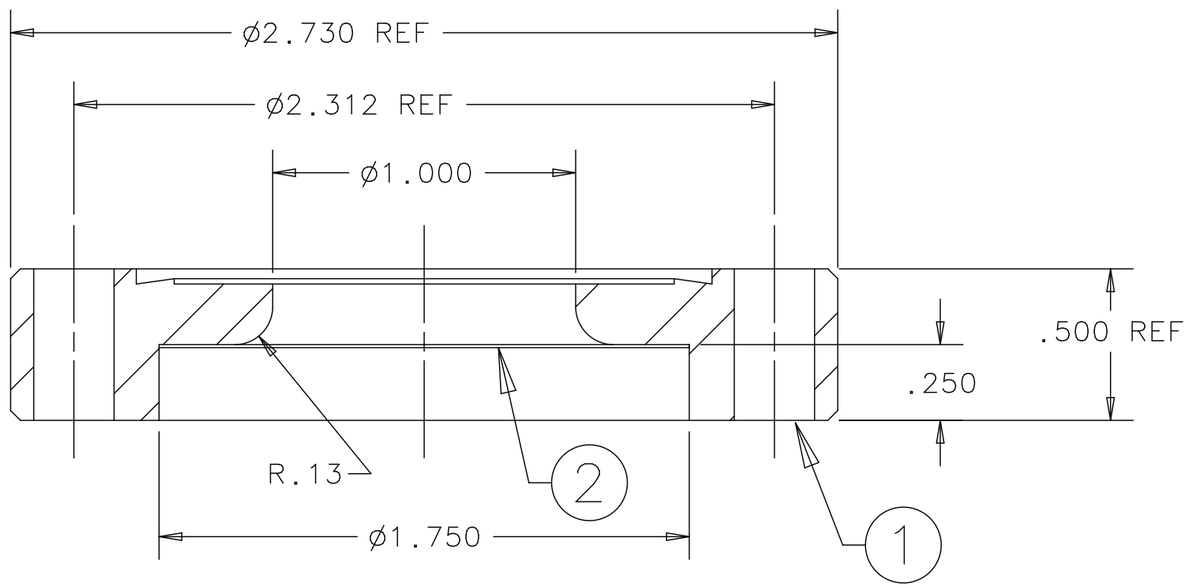

PURCHASED WINDOW
REF. DWG. #121395

ITEM	PART NO.	DESCRIPTION OR SIZE	QTY.
2		Be FOIL, .010 THICK	A/R
1	MDC #110008 OR EQUIV.	CONFLAT FLANGE, ø2 3/4" O.D.	1

PARTS LIST

UNLESS OTHERWISE SPECIFIED			ORIGINATOR	K. ANDERSON	7/21/98
.XX	.XXX	ANGLES	DRAWN	G. WAVER	
± .02	± .005	± 1/2°	CHECKED		
1. BREAK ALL SHARP EDGES 1/64 MAX.			APPROVED		
2. DO NOT SCALE DRAWING.			USED ON		
3. DIMENSIONS BASED UPON ANSI Y14.5M-1982					
4. MAX. ALL MACH. SURFACES √			MATERIAL	SEE P/L	

FERMI NATIONAL ACCELERATOR LABORATORY
UNITED STATES DEPARTMENT OF ENERGY

Be FOIL WINDOW
BRAZE ASSEMBLY

SCALE	FILMED	DRAWING NUMBER	REV.
2X		8875.000-MB-363049	

CADFILE:[NUMI_363]363049.dwg | CREATED WITH I-DEAS_VI | USER NAME: WAVER

NOTES:

1.) ALL WELDS TO BE VACUUM LEAK TIGHT.

2.) LEAK TEST: NO LEAK SHALL BE DETECTABLE ON THE MOST SENSITIVE SCALE OF A HELIUM LEAK DETECTOR WITH A MINIMUM SENSITIVITY OF 10^{-9} ATM.CC/SEC.

3.) BRAZE MATERIAL COPPER/SILVER/TIN IS ACCEPTABLE.