ZONE	REV.	REVISIONS DESCRIPTION	DATE	APPROVED
.	A	Initial release.	11/19/2012	D. Harris
.	.	.	.	.
.	.	.	.	.

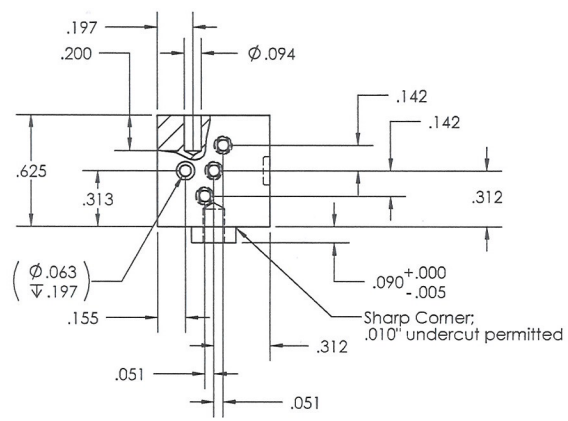

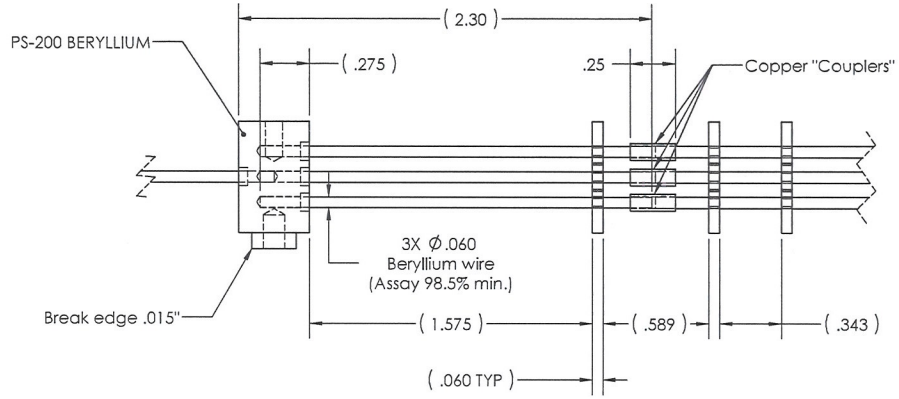

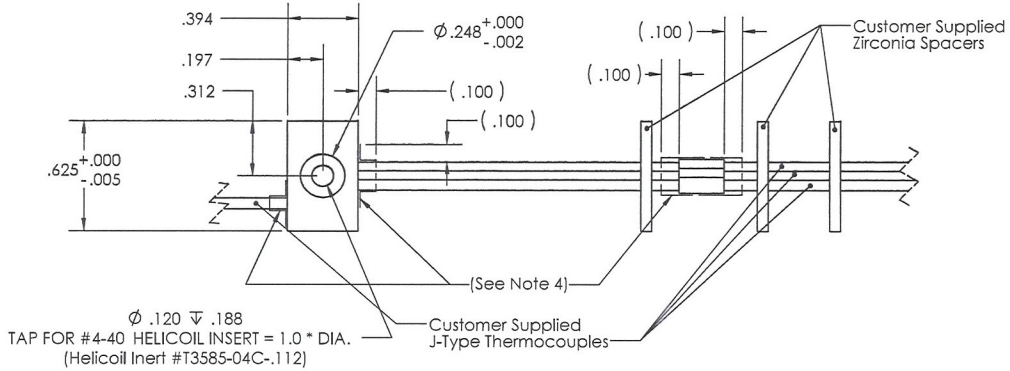

Customer Approval:

(signature) 20 Nov 2012 (date)

NOTES:

1) CUSTOMER TO SUPPLY COMPONENTS AS NOTED.
2) ASSEMBLY JOINTS ARE FOR THERMAL CONTACT ONLY.
3) ALL DIMENSIONS ON ASSEMBLY DRAWING ARE FOR REFERENCE ONLY. COMPONENTS ARE INSPECTED AGAINST COMPONENT DRAWINGS.
4) VISIBLE BRAZE ALLOY BLUSH MAY EXTEND .100" FROM BRAZE JOINTS.

INTERPRET DRAWING PER ANSI Y14.5 M-1994.
UNLESS OTHERWISE SPECIFIED:

© Copyright 2012 Materion Brush Inc.
PROPRIETARY INFORMATION OF MATERION BRUSH INC.
The information included in this document is not to be shown, based or through, or used for any purpose other than with written authorization of Materion Brush Inc.

DIMENSIONS ARE IN INCHES
TOLERANCES:
ANGLES ±0.5
.XX ±0.03
.XXX ±0.005

	NAME	DATE
DRAWN	S. YANG	11/08/12
ENG APPR.	D. Harris	11/19/2012

FINISH (Ra): 63

CUSTOMER: FERMI NATIONAL LAB

MATERIAL: AS SPECIFIED

IF-1, PF-60, PS-200, I5-50M AND TRUEXTENT ARE REGISTERED TRADEMARKS OF MATERION BRUSH INC.

MATERION Electrofusion

TITLE: .060" Be WIRE ASM
PS-200 HEAT SINK

SIZE: B | DWG. NO. 81047 | REV A

SCALE: 3:2 | DO NOT SCALE DRAWING | SHEET 1 OF 1