REV	DESCRIPTION	DRAWN	DATE
		APPROVED	DATE

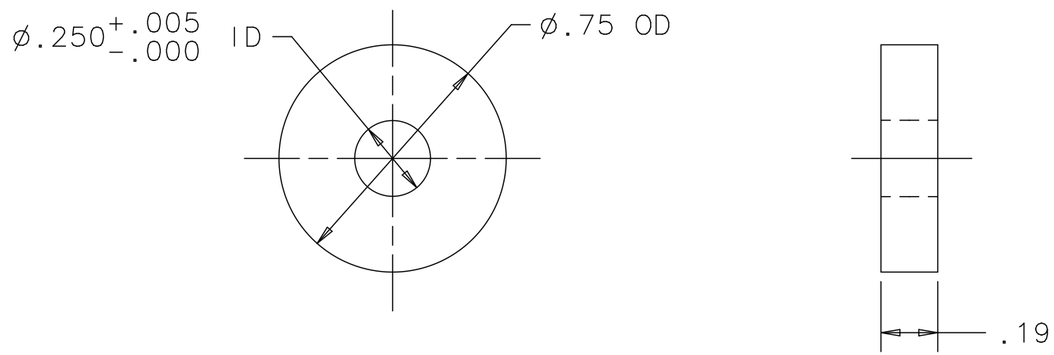

UNLESS OTHERWISE SPECIFIED			ORIGINATOR	K.ANDERSON	13-MAR-2013
.XX	.XXX	ANGLES	DRAWN	G.WAVER	13-MAR-2013
± .015	± .005	±1/2°	CHECKED	K.ANDERSON	14-MAR-2013
1. BREAK ALL SHARP EDGES .015 MAX. 2. DO NOT SCALE DRAWING. 3. DIMENSIONS BASED UPON ASME Y14.5M-1994 4. MAX. ALL MACH. SURFACES 125 5. DRAWING UNITS: U.S. INCH			APPROVED	K.ANDERSON	14-MAR-2013
			USED ON	MC-488599	
			MATERIAL	STNLS STL 316L	

FERMI NATIONAL ACCELERATOR LABORATORY
UNITED STATES DEPARTMENT OF ENERGY

ANU 700KW - TARGET VERTICAL POSITION THERMOMETER 1/4 ID WASHER, 3/16 THK

SCALE	DRAWING NUMBER	SHEET	REV
2X	8875.115-MB-488793	1 OF 1	

CREATED WITH : Ideas12NXSeries | GROUP: ACCELERATOR MECH. SUPPT.

Created: 13:58:59 on 11-04-13 (D-M-Y) By: gwaver State: 3-RELEASED