| REV | DESCRIPTION | DRAWN | DATE |
|---|---|---|---|
| | | APPROVED | DATE |

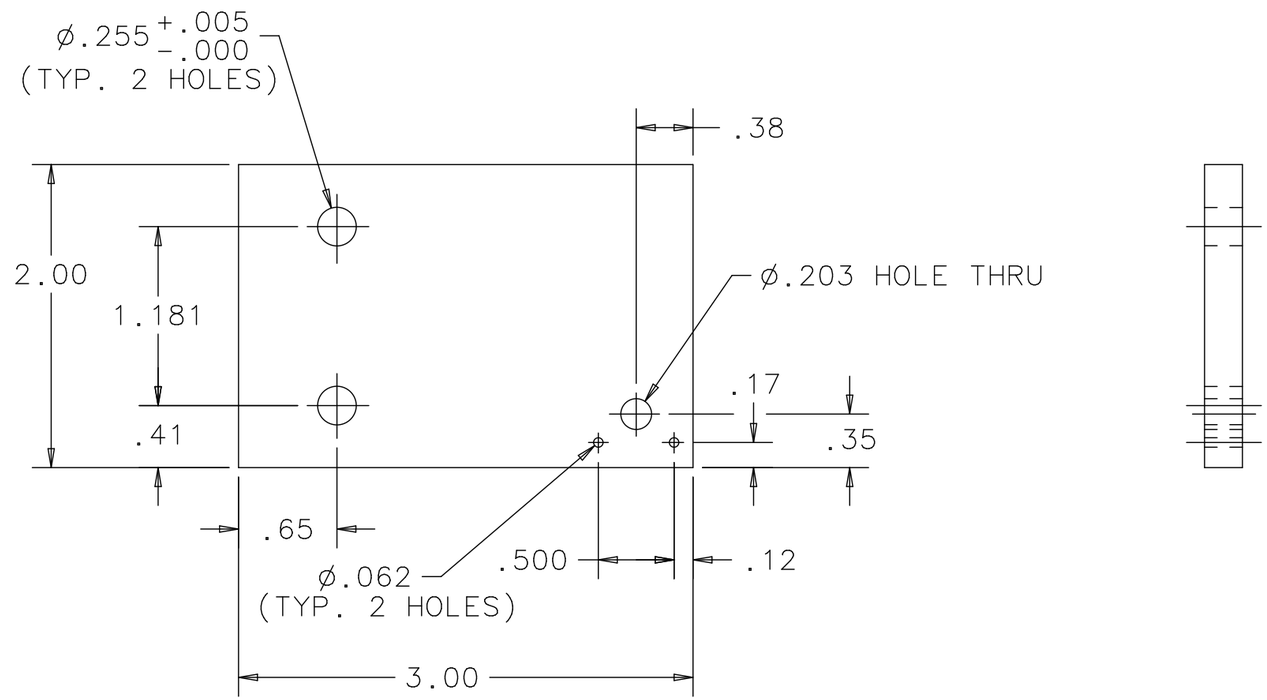


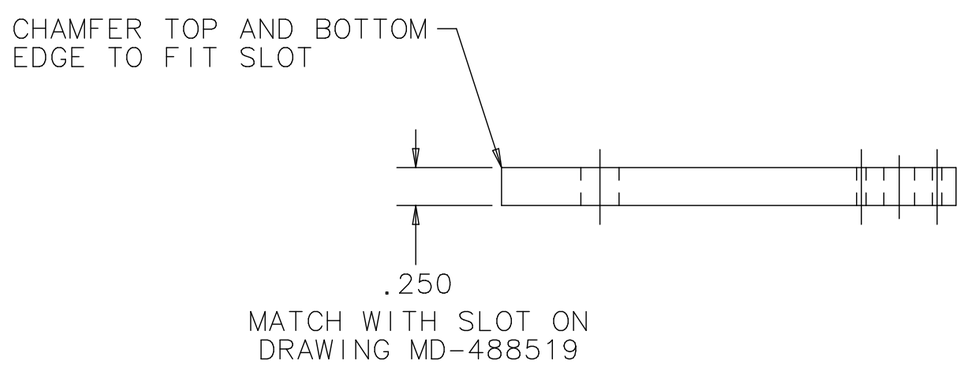


| UNLESS OTHERWISE SPECIFIED | | | ORIGINATOR | M.MCGEE | 13-FEB-2013 |
|---|---|---|---|---|---|
| .XX | .XXX | ANGLES | DRAWN | G.WAVER | 13-FEB-2013 |
| ± .015 | ± .005 | ±1/2° | CHECKED | M.MCGEE | 21-FEB-2013 |
| | | | APPROVED | M.MCGEE | 21-FEB-2013 |

1. BREAK ALL SHARP EDGES .015 MAX.
2. DO NOT SCALE DRAWING.
3. DIMENSIONS BASED UPON ASME Y14.5M-1994
4. MAX. ALL MACH. SURFACES 125
5. DRAWING UNITS: U.S. INCH

USED ON: MC-488599

MATERIAL: ALUMINUM 6061-T6

FERMI NATIONAL ACCELERATOR LABORATORY
UNITED STATES DEPARTMENT OF ENERGY

# ANU 700KW - TARGET VERTICAL POSITION THERMOMETER MULTIWIRE STRAIN RELIEF PLATFORM

| SCALE | DRAWING NUMBER | SHEET | REV |
|---|---|---|---|
| FULL | 8875.115-MB-488780 | 1 OF 1 | |

CREATED WITH : Ideas12NXSeries | GROUP: ACCELERATOR MECH. SUPPT.

Created: 06:32:22 on 22-04-13 (D-M-Y) By: gwaver State: 3-RELEASED