REV	DESCRIPTION	DRAWN	DATE
		APPROVED	DATE

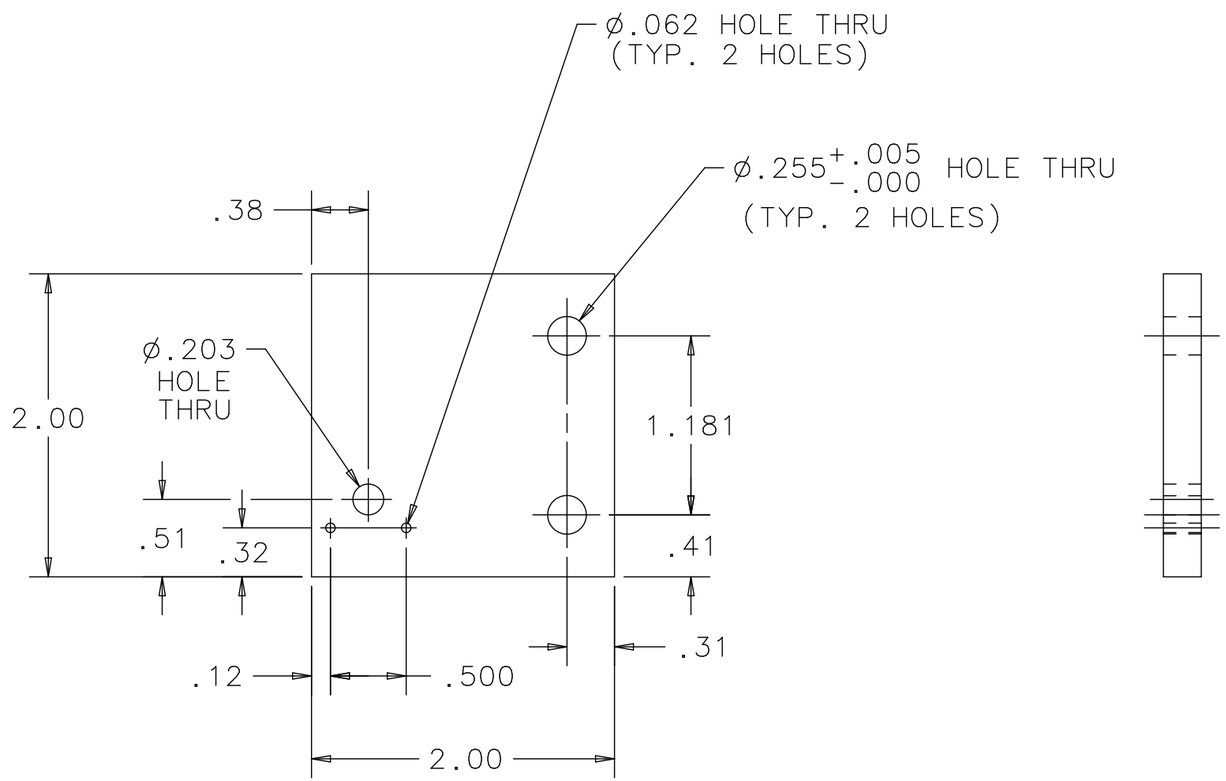

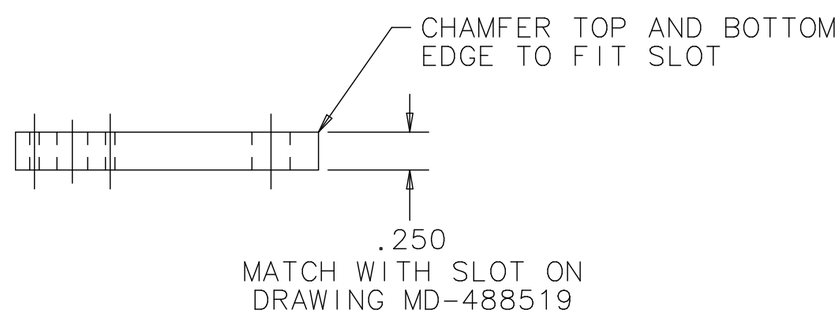

UNLESS OTHERWISE SPECIFIED			ORIGINATOR	M.MCGEE	13-FEB-2013
.XX	.XXX	ANGLES	DRAWN	G.WAVER	13-FEB-2013
± .015	± .005	±1/2°	CHECKED	M.MCGEE	21-FEB-2013
			APPROVED	M.MCGEE	21-FEB-2013

1. BREAK ALL SHARP EDGES .015 MAX.
2. DO NOT SCALE DRAWING.
3. DIMENSIONS BASED UPON ASME Y14.5M-1994
4. MAX. ALL MACH. SURFACES 125
5. DRAWING UNITS: U.S. INCH

USED ON: MC-488599

MATERIAL: ALUMINUM 6061-T6

FERMI NATIONAL ACCELERATOR LABORATORY
UNITED STATES DEPARTMENT OF ENERGY

ANU 700KW - TARGET VERTICAL POSITION THERMOMETER STRAIN RELIEF PLATFORM

SCALE	DRAWING NUMBER	SHEET	REV
FULL	8875.115-MB-488779	1 OF 1	

CREATED WITH : Ideas12NXSeries | GROUP: ACCELERATOR MECH. SUPPT.

Created: 06:31:52 on 22-04-13 (D-M-Y) By: gwaver State: 3-RELEASED