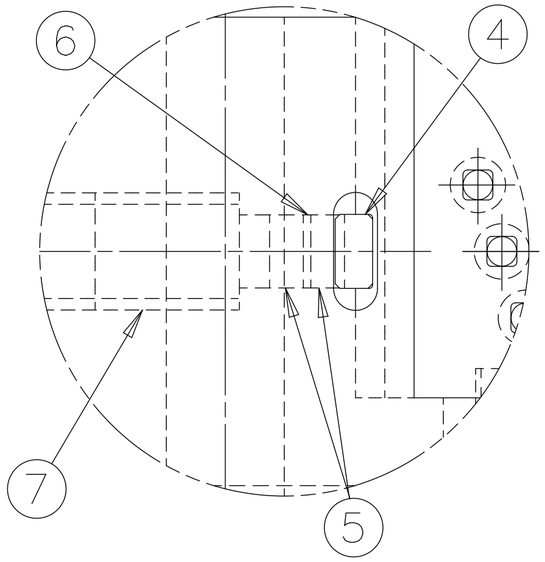

DETAIL 'X'

SCALE: 4X

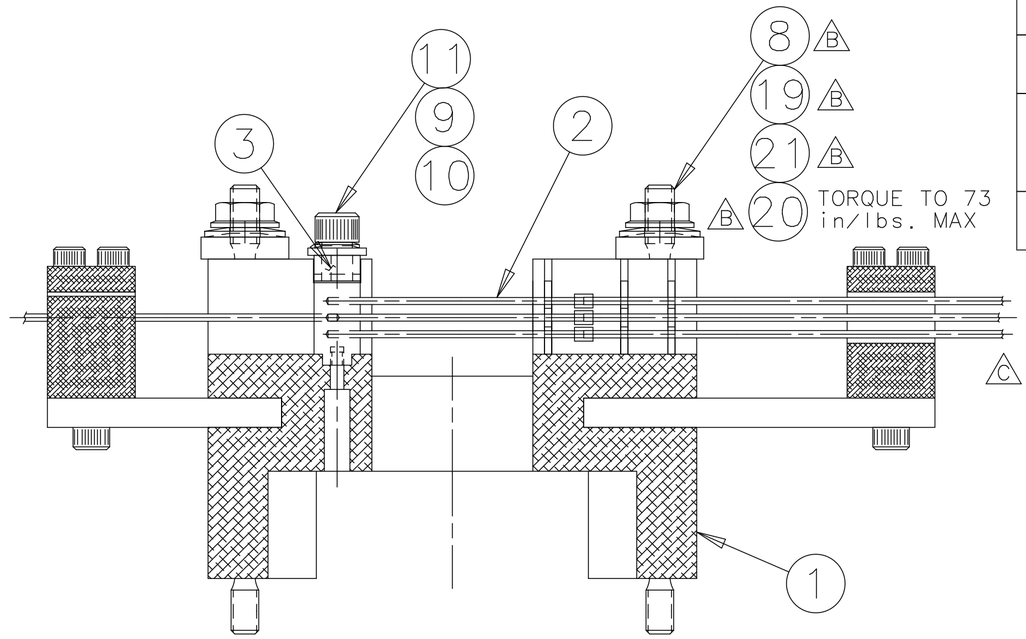

SECTION 'A-A'

NOTES

1.) WIRE ALL BOLT AND SCREW HEADS.

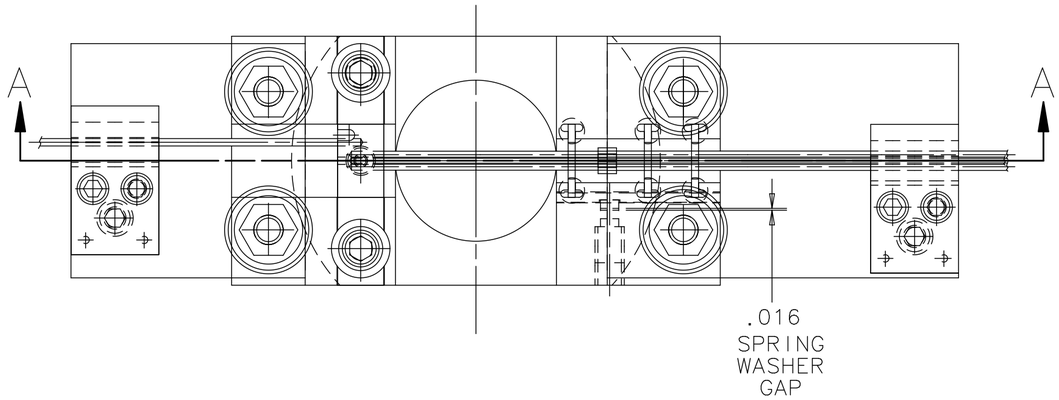

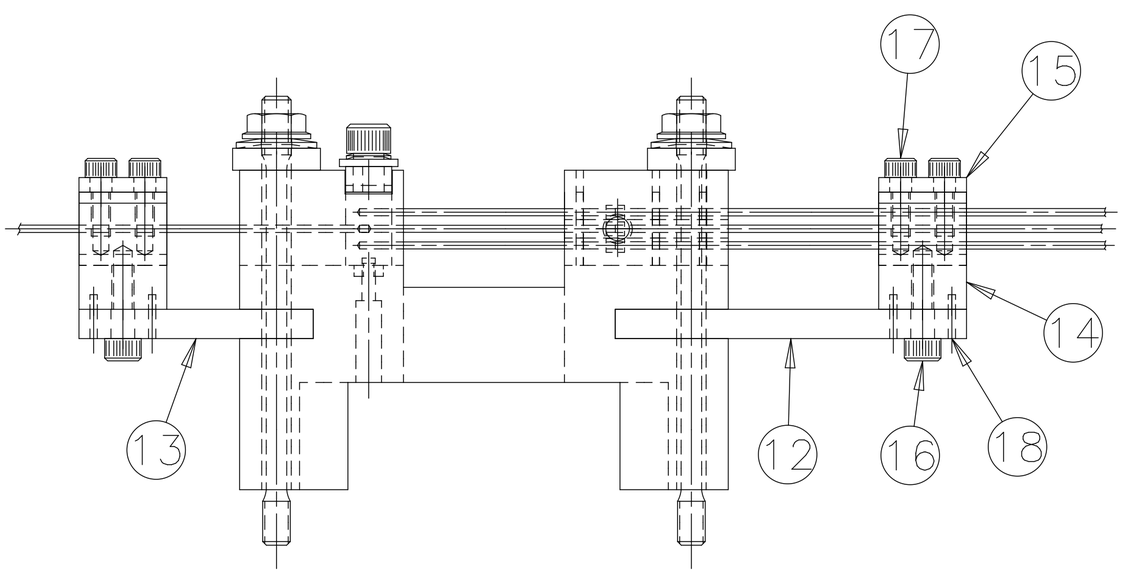

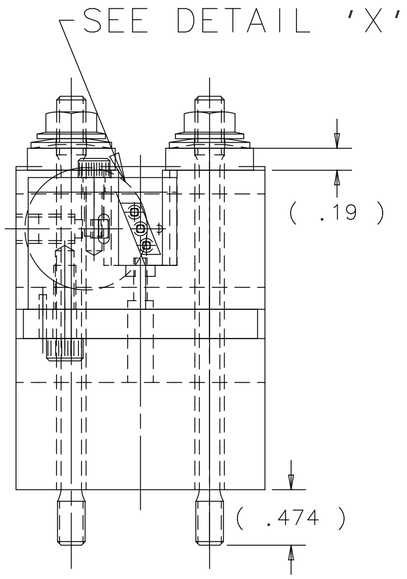

REV	DESCRIPTION	DRAWN / APPROVED	DATE / DATE
A	ADDED NOTE 1;	G. WAVER	2/21/13
	ADDED ITEMS 12 - 18	M.MCGEE	2/21/13
B	ADDED ITEMS 19 - 21; ITEM 8 WAS A BOLT; ITEM 9 WAS QTY 6; ITEM 10 WAS QTY 6; USED ON MET-01	G. WAVER	3/14/13
		K. ANDERSON	3/14/13
C	ITEM #20 WAS F04200M	G. WAVER	3/21/13
		K. ANDERSON	3/21/13

	ITEM	PART NO.	DESCRIPTION OR SIZE	QTY.
B	21	SOLON #4M52718	BELLEVILLE WASHER, INCONNEL	4
C B	20	FF0250-20-0013	1/4-20UNC SPIRALOCK NUT, S.S.	4
B	19	MB-488793	1/4 I.D. FLAT WASHER, .19 THK.	4
A	18	-----	DOWEL PIN, .062 X 3/8" LG.	4
A	17	-----	#8-32UNC X 1/2" LG. SHCS	4
A	16	-----	#10-32UNF X 5/8" LG. SHCS	2
A	15	MB-488778	STRAIN RELIEF PRESS PLATE	2
A	14	MB-488777	STRAIN RELIEF CLAMP	2
A	13	MB-488779	PLATFORM	1
A	12	MB-488780	MULTI WIRE PLATFORM	1
	11	-----	#1/4-20UNC X 3/4" LG. SHCS	2
B	10	McMaster-Carr #92161A029	BELLEVILLE WASHER	2
B	9	-----	1/4 I.D. FLAT WASHER	2
B	8	MB-488792	1/4-20UNC FATIGUE STUD	4
	7	-----	#1/4-20 SET SCREW, DOG POINT	1
	6		PRESS PLATE SPRING WASHER	A/R
	5	MB-488606	PRESS PLATE WASHER	2
	4	MB-488605	PRESS PLATE	1
	3	MB-488596	PRESS BAR	1
	2	MD-488520	WIRING	1
	1	MD-488519	HOUSING	1

PARTS LIST

UNLESS OTHERWISE SPECIFIED			ORIGINATOR	M.MCGEE	12-JUN-2012
.XX	.XXX	ANGLES	DRAWN	G.WAVER	12-JUN-2012
± .02	± .005	±1/2°	CHECKED	M.MCGEE	05-DEC-2012
			APPROVED	M.MCGEE	05-DEC-2012

1. BREAK ALL SHARP EDGES .015 MAX.
2. DO NOT SCALE DRAWING.
3. DIMENSIONS BASED UPON ASME Y14.5M-1994
4. MAX. ALL MACH. SURFACES 125
5. DRAWING UNITS: U.S. INCH

USED ON: ME-433843

MATERIAL: SEE PARTS LIST

FERMI NATIONAL ACCELERATOR LABORATORY
UNITED STATES DEPARTMENT OF ENERGY

ANU 700KW - TARGET VERTICAL POSITION THERMOMETER FINAL ASSEMBLY

SCALE	DRAWING NUMBER	SHEET	REV
FULL	8875.115-MC-488599	1 OF 1	C

CREATED WITH : Ideas12NXSeries | GROUP: ACCELERATOR MECH. SUPPT.

Created: 13:56:45 on 11-04-13 (D-M-Y) By: gwaver State: 1-INITIAL