REV	DESCRIPTION	DRAWN / APPROVED	DATE / DATE
A	ITEM #1 WAS ALUMINUM	G. WAVER	6/12/12
		M. MCGEE	6/12/12
B	UPDATED DRAWING PER ELECTROFUSION #81047A	G. WAVER	11/20/12
		M. MCGEE	11/20/12

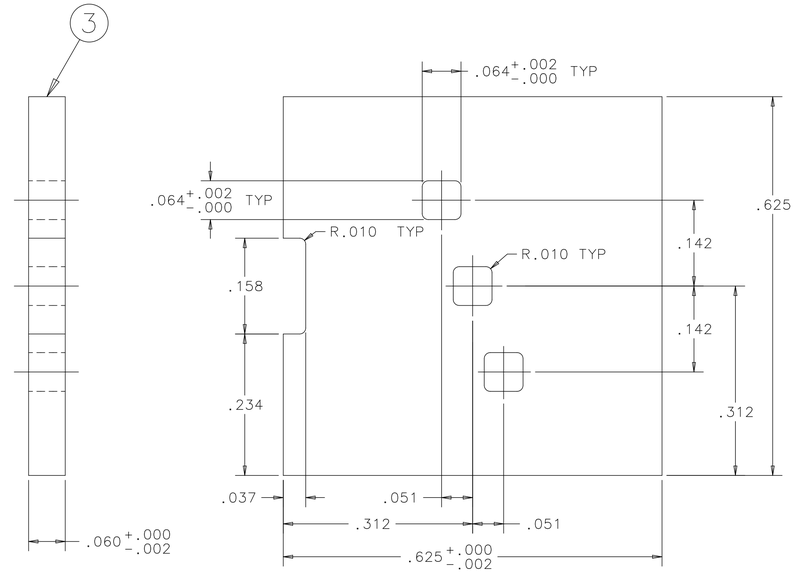

DETAIL X
3 REQUIRED
SCALE: 8X

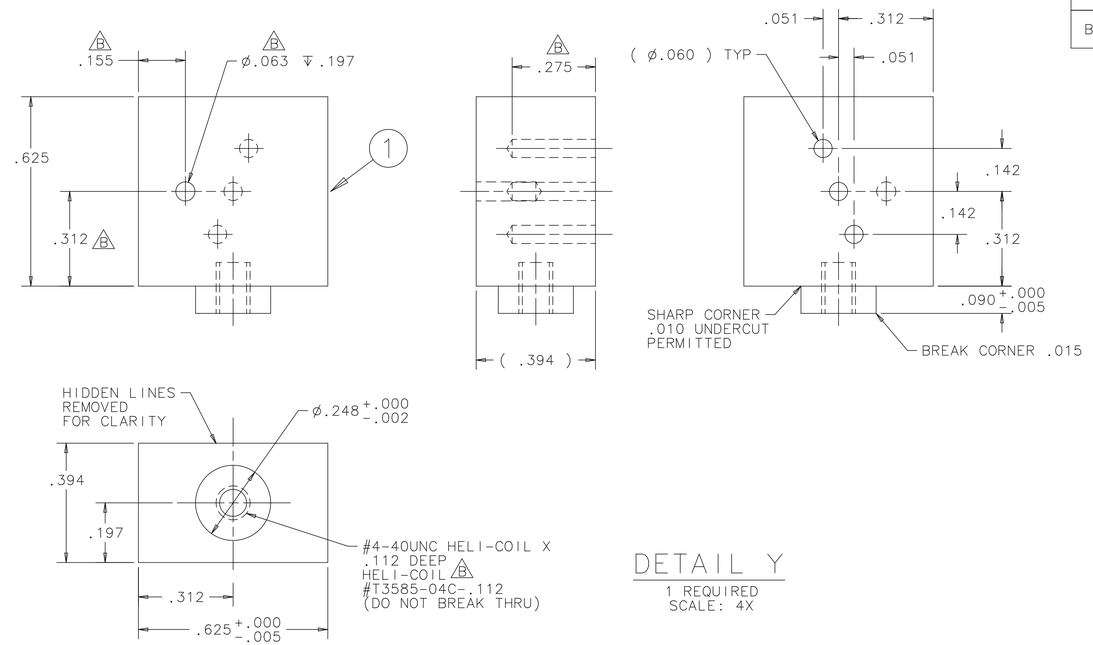

DETAIL Y
1 REQUIRED
SCALE: 4X

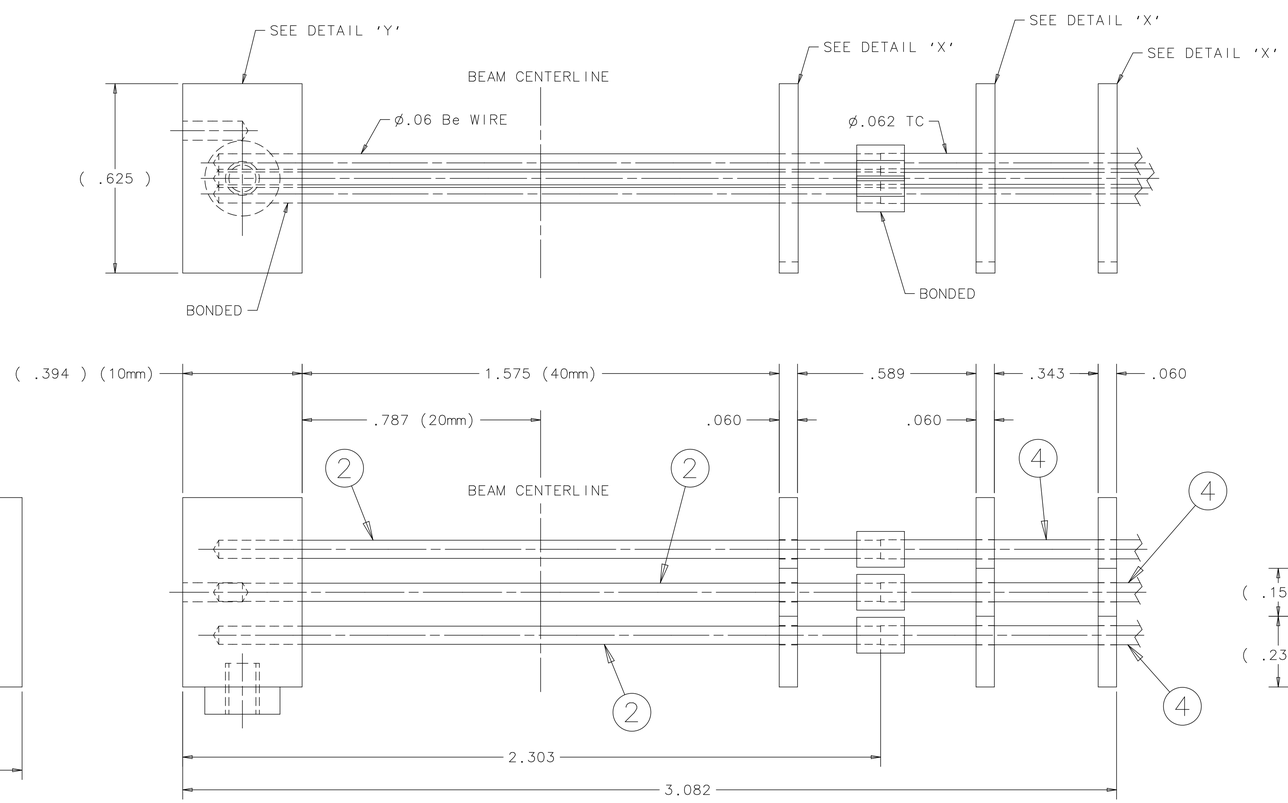

ITEM	PART NO.	DESCRIPTION OR SIZE	QTY.
5			
4	ICSS-116U-60	THERMOCOUPLE, TYPE-J, 60" LONG	A/R
3	-----	Y-TZP ZIRCONIA CERAMIC	A/R
2	-----	PF-60 BERYLLIUM WIRE, ø.06	A/R
1	-----	BERYLLIUM BLOCK	A/R

PARTS LIST

UNLESS OTHERWISE SPECIFIED					
.XX	.XXX	ANGLES	ORIGINATOR	M.MCGEE	27-FEB-2012
± .015	± .005	±1/2°	DRAWN	G.WAVER	27-FEB-2012
			CHECKED	M.MCGEE	07-MAR-2012
			APPROVED	M.MCGEE	07-MAR-2012

1. BREAK ALL SHARP EDGES .015 MAX.
2. DO NOT SCALE DRAWING.
3. DIMENSIONS BASED UPON ASME Y14.5M-1994
4. MAX. ALL MACH. SURFACES 63
5. DRAWING UNITS: U.S.INCH

USED ON

MATERIAL: SEE PARTS LIST

FERMI NATIONAL ACCELERATOR LABORATORY
UNITED STATES DEPARTMENT OF ENERGY

ANU 700KW - TARGET THERMAL VERTICAL POSITION THERMOMETER WIRING

SCALE	DRAWING NUMBER	SHEET	REV
4X	8875.115-MD-488520	1 OF 1	B

CREATED WITH : Ideas12NXSeries GROUP: ACCELERATOR MECH. SUPPT.