REV	DESCRIPTION	DRAWN / APPROVED	DATE / DATE
A	REVISED DRAWING	G. WAVER	3/12/12
		M. MCGEE	3/23/12
B	ADDED 6 C'BORED HOLES	G. WAVER	6/13/12
		M. MCGEE	6/14/12
C	ADDED SLOTS TO SECTION 'A-A'	G. WAVER	2/13/13
		M. McGEE	2/14/13

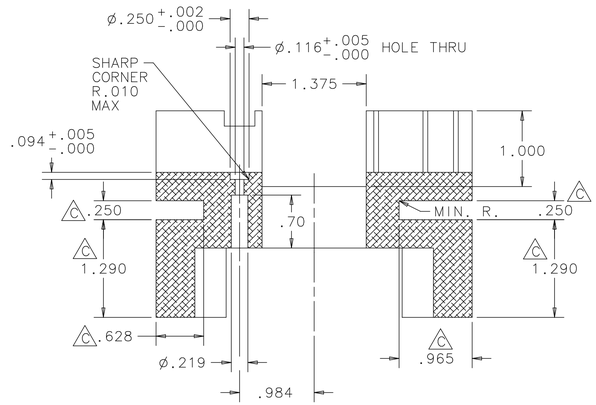

SECTION 'A-A'

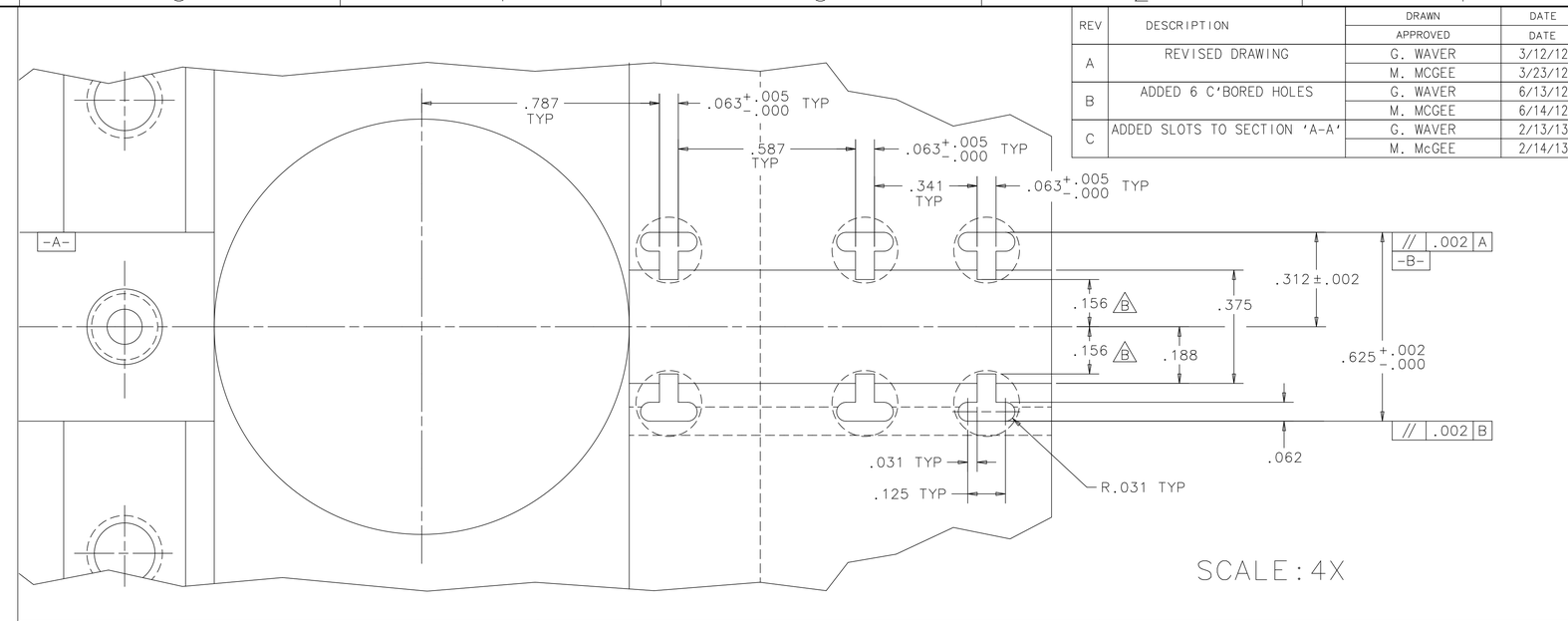

SCALE: 4X

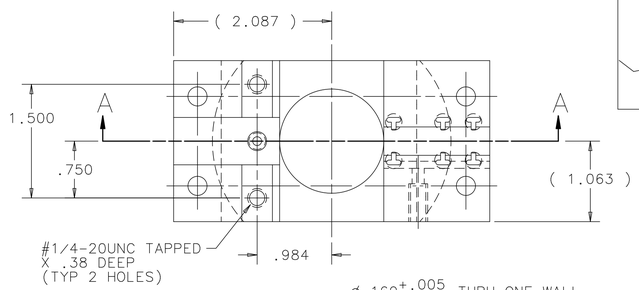

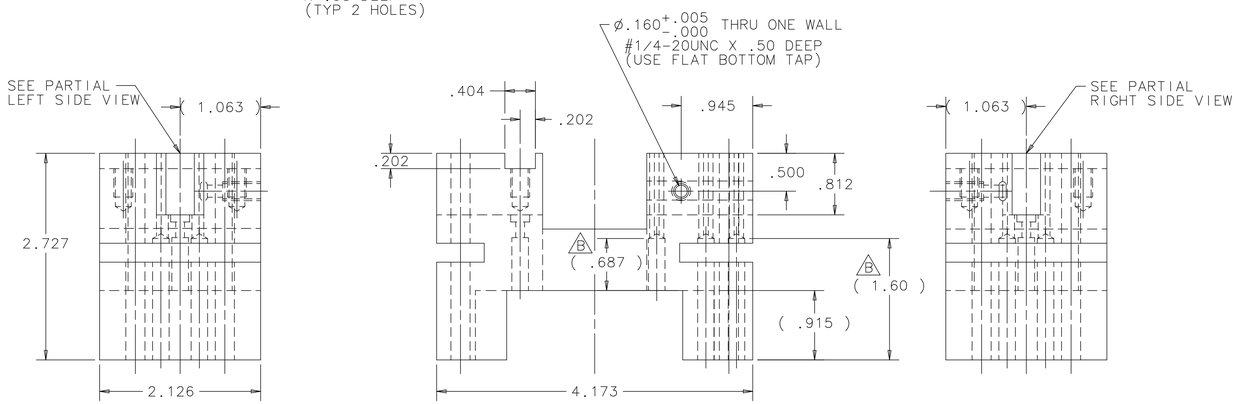

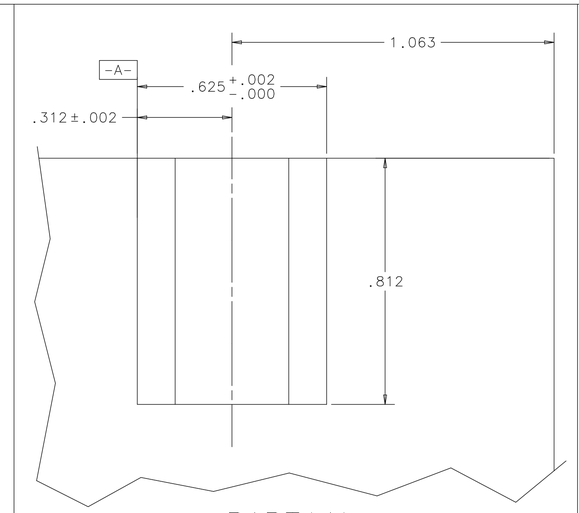

PARTIAL
LEFT SIDE VIEW
SCALE: 4X

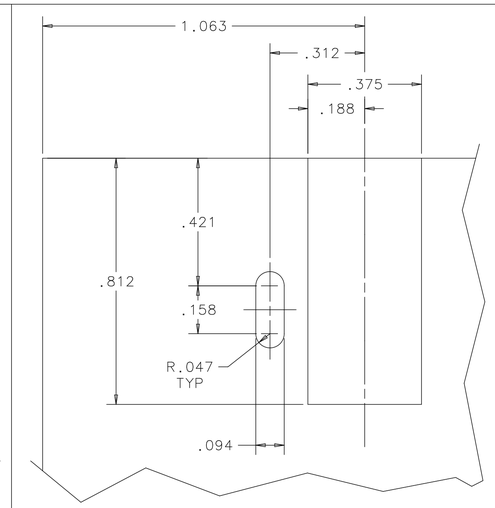

PARTIAL
RIGHT SIDE VIEW
SCALE: 4X

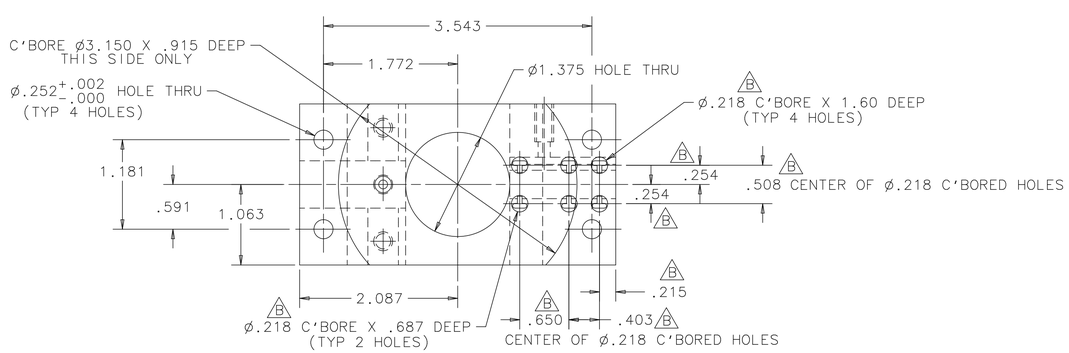

UNLESS OTHERWISE SPECIFIED			ORIGINATOR	M.MCGEE	22-FEB-2012
.XX	.XXX	ANGLES	DRAWN	G.WAVER	22-FEB-2012
± .015	± .005	±1/2°	CHECKED	M.MCGEE	07-MAR-2012
			APPROVED	M.MCGEE	07-MAR-2012

1. BREAK ALL SHARP EDGES .015 MAX.
2. DO NOT SCALE DRAWING.
3. DIMENSIONS BASED UPON ASME Y14.5M-1994
4. MAX. ALL MACH. SURFACES 63
5. DRAWING UNITS: U.S. INCH

USED ON

MATERIAL: ALUMINUM 6061-T6

FERMI NATIONAL ACCELERATOR LABORATORY
UNITED STATES DEPARTMENT OF ENERGY

ANU 700KW - TARGET THERMAL VERTICAL POSITION THERMOMETER HOUSING

SCALE	DRAWING NUMBER	SHEET	REV
FULL	8875.115-MD-488519	1 OF 1	C

CREATED WITH : Ideas12NXSeries | GROUP: ACCELERATOR MECH. SUPPT.