REV	DESCRIPTION	DRAWN / APPROVED	DATE / DATE
A	ITEM 1 CHANGED, ITEMS 2,3,5, AND 6 UPDATED	R.STEWART	25-FEB-2011
		M.MCGEE	25-FEB-2011
B	ITEMS 3,4, AND 6 UPDATED	R.STEWART	24-FEB-2012
		M.MCGEE	28-FEB-2012
C	WELD CHANGED	R.STEWART	21-FEB-2013
		M.MCGEE	21-FEB-2013

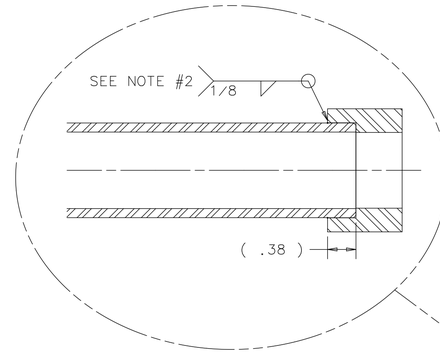

SCALE 1:1

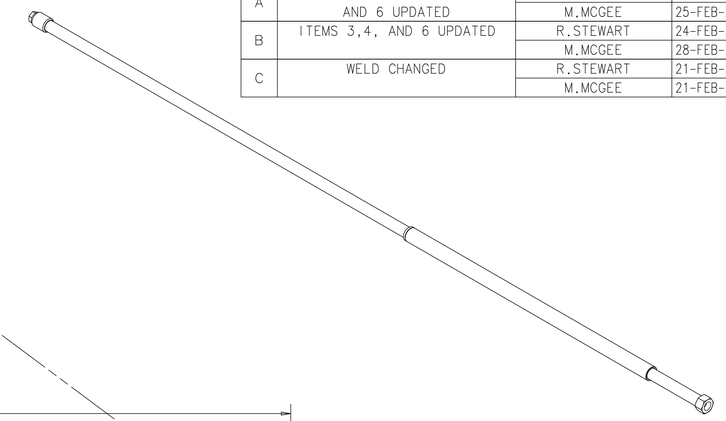

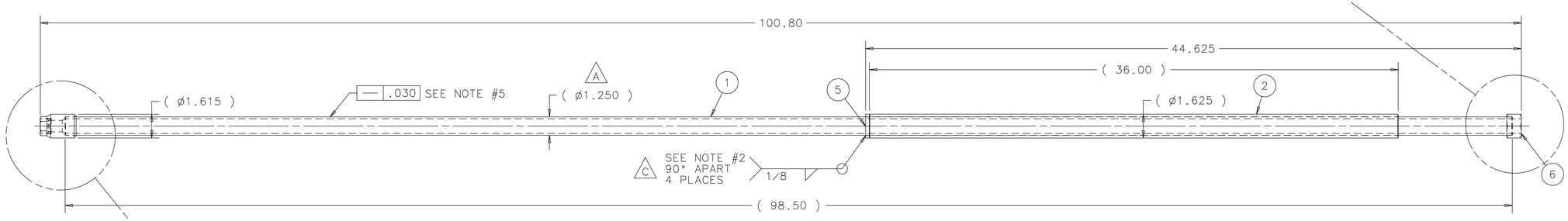

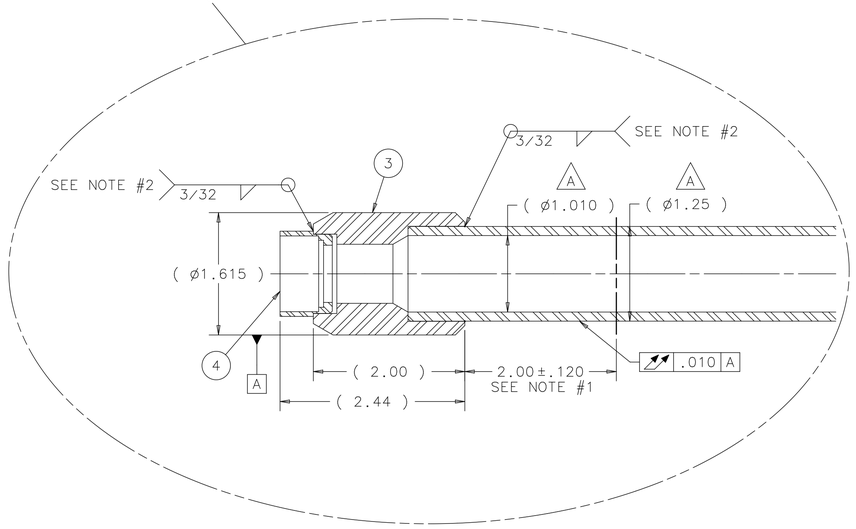

DETAIL SECTION VIEW
SCALE: FULL

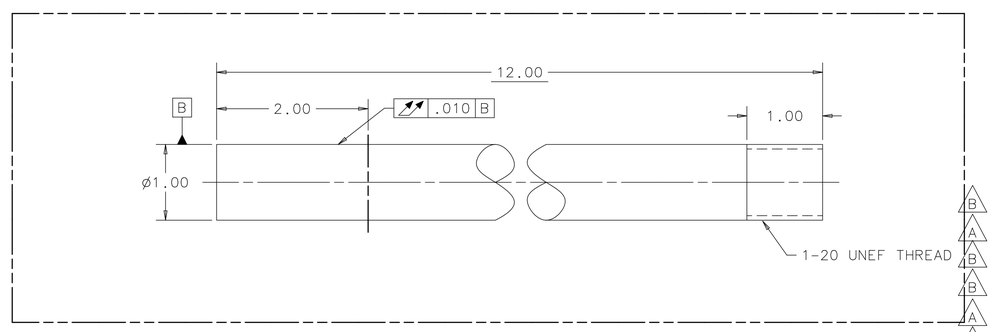

CHECKING MANDREL DETAIL - SCALL: FULL
2 MANDRELS NEEDED
COPPER - TO BE USED AS A HEATSINK DURING WELDING
STEEL - TO BE USED FOR CHECKING RUN OUT

ITEM	PART NO.	DESCRIPTION OR SIZE	QTY.
6	MB-433683	US WATER TUBE NUT	1
5	MB-433682	US WATER TUBE RETAINING RING	1
4	MB-433681	U.S. REMOTE CONNECTOR WELD NUT	1
3	MB-433680	US REMOTE WATER LINE SINKER	1
2	MB-433679	US WATER TUBE PLUG	1
1	SWAGELOK P/N SS-T20-S-120-20	1 1/4" FULLY ANNEALLED SEAMLESS TUBING 316L (1.250 O.D. X 1.010 I.D. X .120 WALL) PER ASTM A269	1

PARTS LIST

UNLESS OTHERWISE SPECIFIED			ORIGINATOR	M.MCGEE	13-DEC-2010
.XX	.XXX	ANGLES	DRAWN	R.STEWART	13-DEC-2010
± .01	± .005	± .5°	CHECKED	M.MCGEE	27-DEC-2010
			APPROVED	M.MARTENS	27-DEC-2010

1. BREAK ALL SHARP EDGES .015 MAX.
2. DO NOT SCALE DRAWING.
3. DIMENSIONS BASED UPON ASME Y14.5M-1994
4. MAX. ALL MACH. SURFACES 63
5. DRAWING UNITS: U.S. INCH

USED ON: MC-433674

MATERIAL: SEE PARTS LIST ABOVE

FERMI NATIONAL ACCELERATOR LABORATORY
UNITED STATES DEPARTMENT OF ENERGY

NOVA-ANU TARGET HALL
MEDIUM ENERGY TARGET BAFFLE
US OUTER WATER TUBE WELDMENT

SCALE	DRAWING NUMBER	SHEET	REV
1:4	8875.112-MD-433676	1 OF 1	C

CREATED WITH : Ideas12NXSeries GROUP: ACCELERATOR MECH. SUPPT.

NOTES:
1. CONCENTRICITY TOLERANCE APPLIES ONLY TO 2.00" OF TUBING. NOTED IN DETAIL SECTION VIEW.
2. WELD NOTE: TIG WELD WITH ARGON BACK PURGE. VERY CRITICAL TO CONTROL WELD HEAT AND SUBSEQUENT PART DISTORTION.
3. HYDROSTATIC TEST TO 120 PSI. ASM. SHOULD MAINTAIN PRESSURE FOR 2 HOURS WHEN ISOLATED.
4. SPARES TO BE LABELED AFTER HYDROSTATIC TEST WITH RESULTS, DATED AND INITIALED.
5. SUPPORT PART AT EACH END WITH INDICATOR READING AT CENTER. (AFTER WELDING)
6. SUPPORT WELDMENT (ITEM #5) AT EACH END WITH INDICATOR READING AT END OF CHECKING MANDREL. (AFTER WELDING)