REV	DESCRIPTION	DRAWN / APPROVED	DATE / DATE
A	ITEM 1 CHANGED, ITEM 2 UPDATED	R.STEWART	25-FEB-2011
		M.MCGEE	25-FEB-2011
B	ITEMS 2 AND 3 CHANGED	R.STEWART	27-FEB-2012
		M.MCGEE	28-FEB-2012

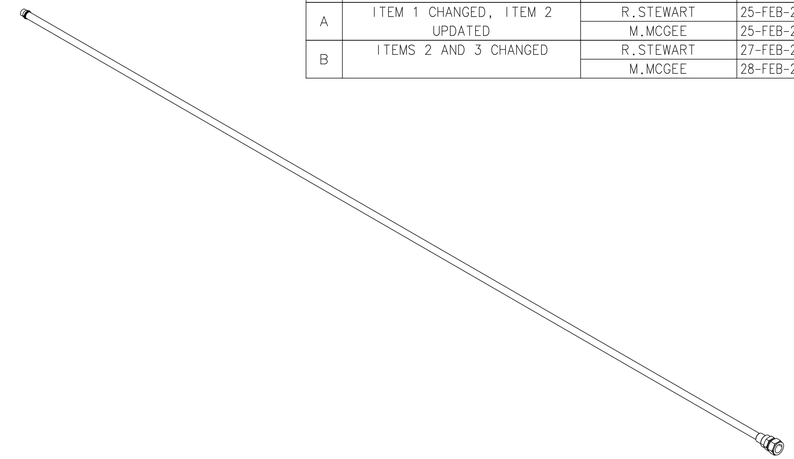

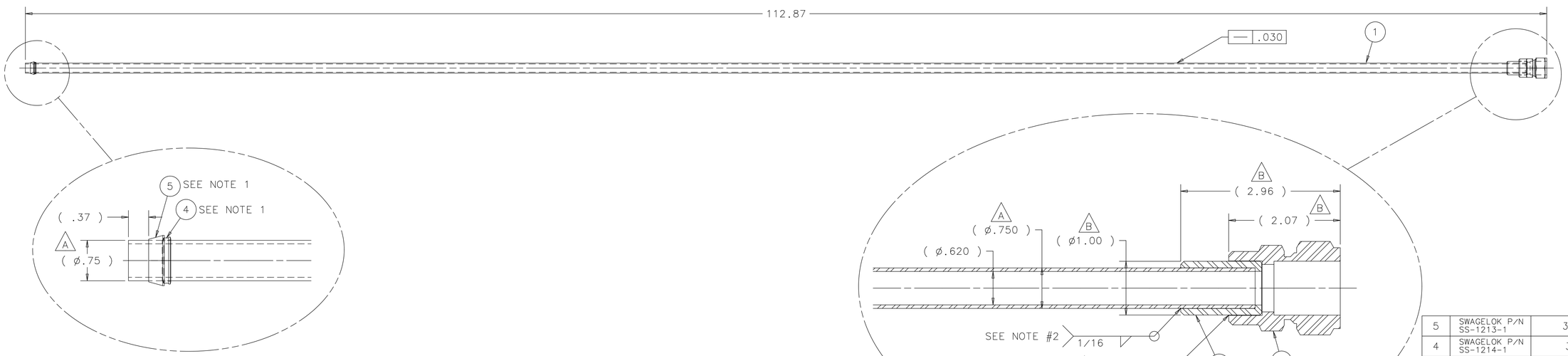

DETAIL VIEW B
SCALE: FULL

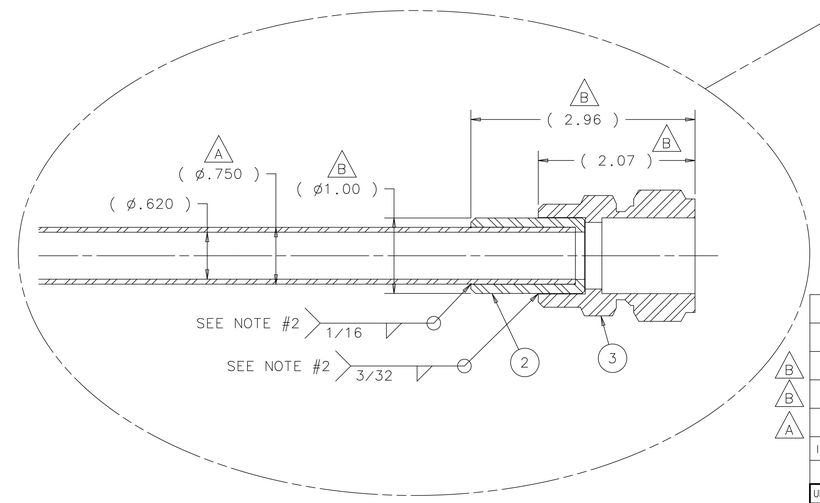

DETAIL SECTION VIEW A
SCALE: FULL

ITEM	PART NO.	DESCRIPTION OR SIZE	QTY.
5	SWAGELOK P/N SS-1213-1	3/4" FRONT FERRULE 316L	1
4	SWAGELOK P/N SS-1214-1	3/4" BACK FERRULE 316L	1
B 3	SWAGELOK P/N SS-1610-6-16W	1X1 TUBE SOCKET WELD UNION	1
B 2	MB-433678	US INNER WATER TUBE ADAPTER	1
A 1	SWAGELOK P/N SS-T12-S-065-20	3/4" FULLY ANNEALED SEAMLESS TUBING 316L (.750 X .620 X .065 WALL) PER ASTM A269	1

PARTS LIST

UNLESS OTHERWISE SPECIFIED			ORIGINATOR	M.MCGEE	10-DEC-2010
.XX	.XXX	ANGLES	DRAWN	R.STEWART	10-DEC-2010
± .01	± .005	± .5°	CHECKED	M.MCGEE	27-DEC-2010
			APPROVED	M.MARTENS	27-DEC-2010

1. BREAK ALL SHARP EDGES .015 MAX.
2. DO NOT SCALE DRAWING.
3. DIMENSIONS BASED UPON ASME Y14.5M-1994
4. MAX. ALL MACH. SURFACES 63
5. DRAWING UNITS: U.S. INCH

USED ON: MC-433674

MATERIAL: SEE PARTS LIST ABOVE

FERMI NATIONAL ACCELERATOR LABORATORY
UNITED STATES DEPARTMENT OF ENERGY

NOVA-ANU TARGET HALL MEDIUM ENERGY TARGET BAFFLE US INNER WATER TUBE ASSEMBLY

SCALE	DRAWING NUMBER	SHEET	REV
1:4	8875.112-MD-433675	1 OF 1	B

CREATED WITH : Ideas12NXSeries GROUP: ACCELERATOR MECH. SUPPT.

NOTES:

1. INSTALL ITEMS #4 AND #5 AFTER INSERTING TUBE AT FINAL ASSEMBLY DRAWING NO. MC-433674
2. WELD NOTE: TIG WELD WITH ARGON BACK PURGE. VERY CRITICAL TO CONTROL WELD HEAT AND SUBSEQUENT PART DISTORTION.
3. HYDROSTATIC TEST TO 120 PSI. ASM. SHOULD MAINTAIN PRESSURE FOR 2 HOURS WHEN ISOLATED.
4. SPARES TO BE LABLED AFTER HYDROSTATIC TESTR WITH RESULTS. DATED AND INITIALED.