REV	DESCRIPTION	DRAWN / APPROVED	DATE / DATE
A	ITEM 1 CHANGED, ITEMS 2,3,5, AND 6 UPDATED	R.STEWART	25-FEB-2011
		M.MCGEE	25-FEB-2011
B	ITEMS 3,4, AND 6 UPDATED	R.STEWART	24-FEB-2012
		M.MCGEE	28-FEB-2012
C	WELD CHANGED	R.STEWART	21-FEB-2013
		M.MCGEE	21-FEB-2013
D	CHANGED WATER LINE TUBE WELDMENT TO ACCOMMODATE 3/4" WATER LINE TO BE SIMILAR TO THE UPSTREAM LINES.	DGH	18-APR-2013
		M.MCGEE	03-MAY-2013
E	FIXED TYPO.	DGH	25-JUL-2013
		M.MCGEE	25-JUL-2013

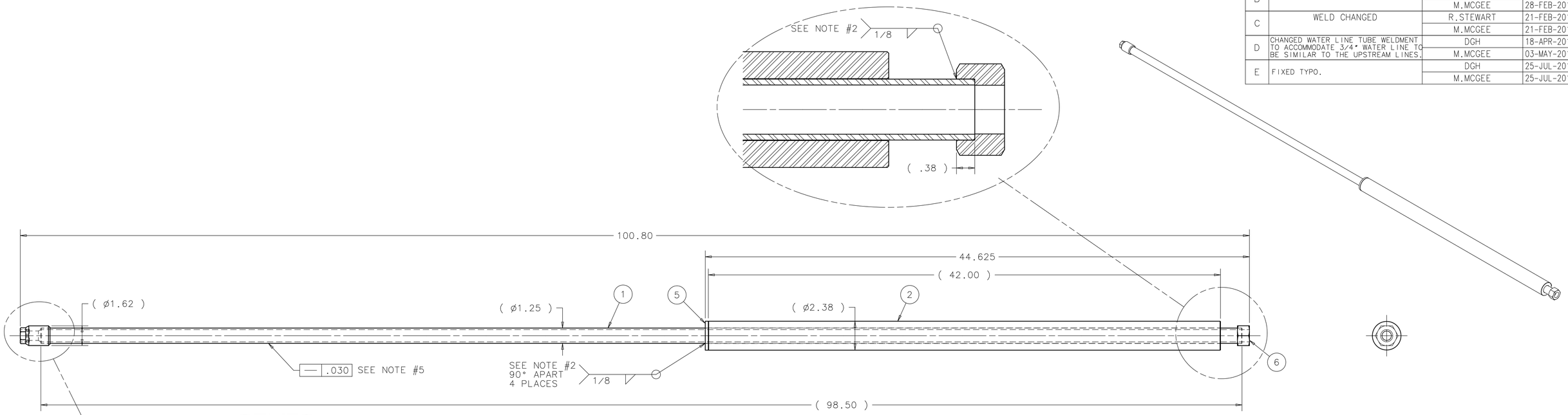

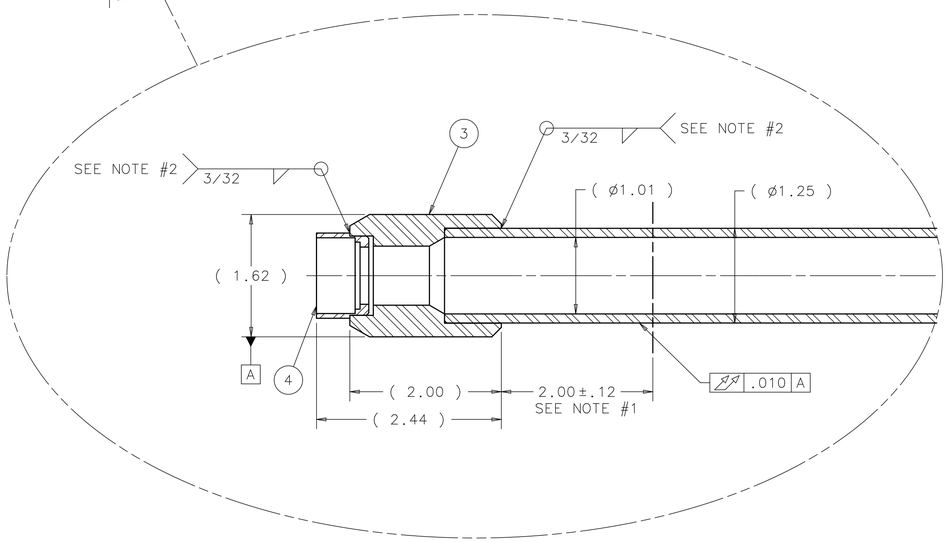

DETAIL SECTION VIEW
SCALE: FULL

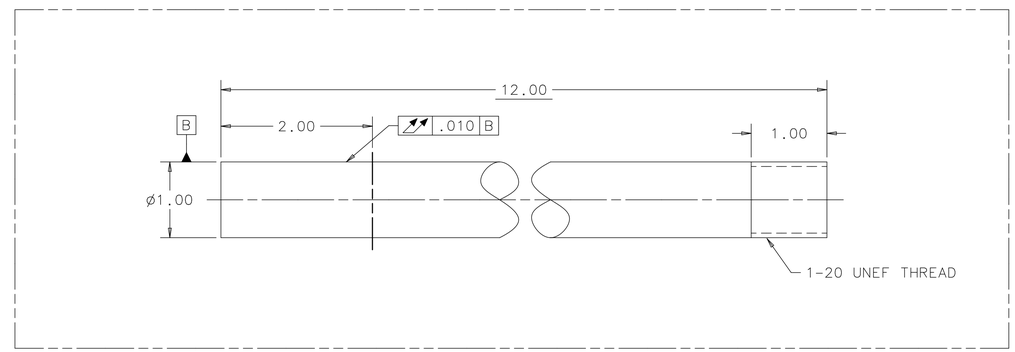

CHECKING MANDREL DETAIL - SCALL: FULL
2 MANDRELS NEEDED
COPPER - TO BE USED AS A HEATSINK DURING WELDING
STEEL - TO BE USED FOR CHECKING RUN OUT

NOTES:
1. RUNOUT APPLIES ONLY TO 2.00" OF TUBING. NOTED IN DETAIL SECTION VIEW.
2. WELD NOTE: TIG WELD WITH ARGON BACK PURGE. VERY CRITICAL TO CONTROL WELD HEAT AND SUBSEQUENT PART DISTORTION.
3. HYDROSTATIC TEST TO 120 PSI. ASM. SHOULD MAINTAIN PRESSURE FOR 2 HOURS WHEN ISOLATED.
4. SPARES TO BE LABELED AFTER HYDROSTATIC TEST WITH RESULTS, DATED AND INITIALED.
5. SUPPORT PART AT EACH END WITH INDICATOR READING AT CENTER. (AFTER WELDING)
6. SUPPORT WELDMENT (ITEM #5) AT EACH END WITH INDICATOR READING AT END OF CHECKING MANDREL. (AFTER WELDING)

ITEM	PART NO.	DESCRIPTION OR SIZE	QTY.
6	MB-433683	US WATER TUBE NUT	1
5	MB-433672	DS WATER TUBE RETAINING RING	1
4	MB-433681	U.S. REMOTE CONNECTOR WELD NUT	1
3	MB-433680	US REMOTE WATER LINE SINKER	1
2	MB-433669	DS WATER TUBE PLUG	1
1	SWAGELOK P/N SS-T20-S-120-20	1 1/4" FULLY ANNEALLED SEAMLESS TUBING 316L (1.25 OD X .120 WALL) PER ASTM A269	1

PARTS LIST

UNLESS OTHERWISE SPECIFIED			ORIGINATOR	M.MCGEE	08-DEC-2010
.XX	.XXX	ANGLES	DRAWN	R.STEWART	08-DEC-2010
± .01	± .005	± .5°	CHECKED	M.MCGEE	27-DEC-2010
			APPROVED	M.MARTENS	27-DEC-2010

1. BREAK ALL SHARP EDGES .015 MAX.
2. DO NOT SCALE DRAWING.
3. DIMENSIONS BASED UPON ASME Y14.5M-1994
4. MAX. ALL MACH. SURFACES 63
5. DRAWING UNITS: U.S. INCH

USED ON: MC-433664

MATERIAL: SEE PARTS LIST ABOVE

FERMI NATIONAL ACCELERATOR LABORATORY
UNITED STATES DEPARTMENT OF ENERGY

NOVA-ANU TARGET HALL
MEDIUM ENERGY TARGET BAFFLE
DS OUTER WATER TUBE WELDMENT

SCALE	DRAWING NUMBER	SHEET	REV
1:4	8875.112-MD-433666	1 OF 1	E

CREATED WITH : Ideas12NXSeries | GROUP: ACCELERATOR MECH. SUPPT.