| REV | DESCRIPTION | DRAWN | DATE |
|---|---|---|---|
| | | APPROVED | DATE |
| A | ø1.260 DIMENSION WAS ø1.325 | R.STEWART | 25-FEB-2011 |
| | | M.MCGEE | 25-FEB-2011 |
| B | ø1.254 DIMENSION WAS ø1.260 | R.STEWART | 24-FEB-2012 |
| | | M.MCGEE | 28-FEB-2012 |
| C | MATERIAL CHANGED | R.STEWART | 05-FEB-2013 |
| | | M.MCGEE | 05-FEB-2013 |

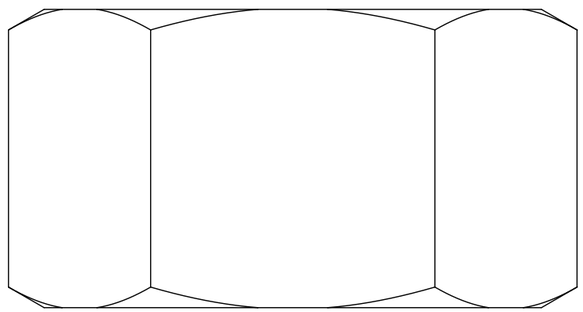

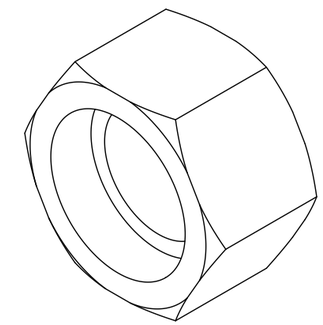

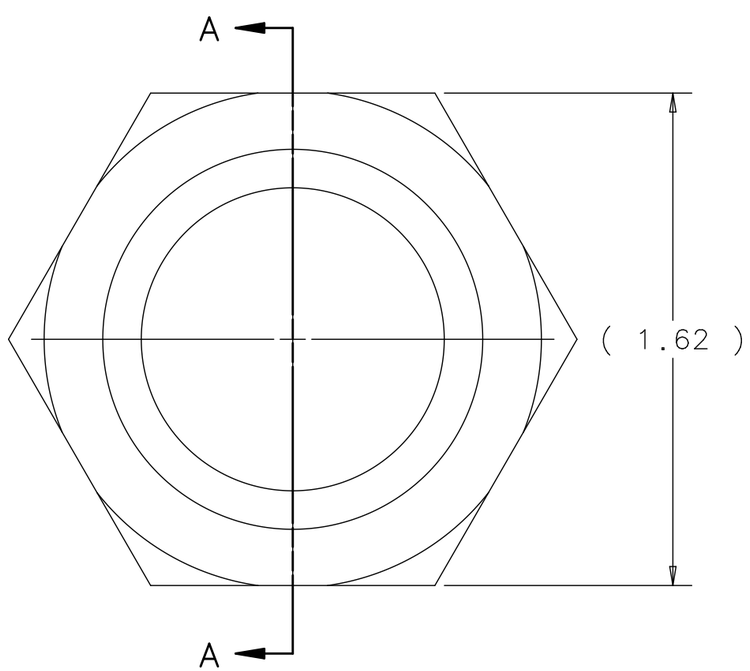


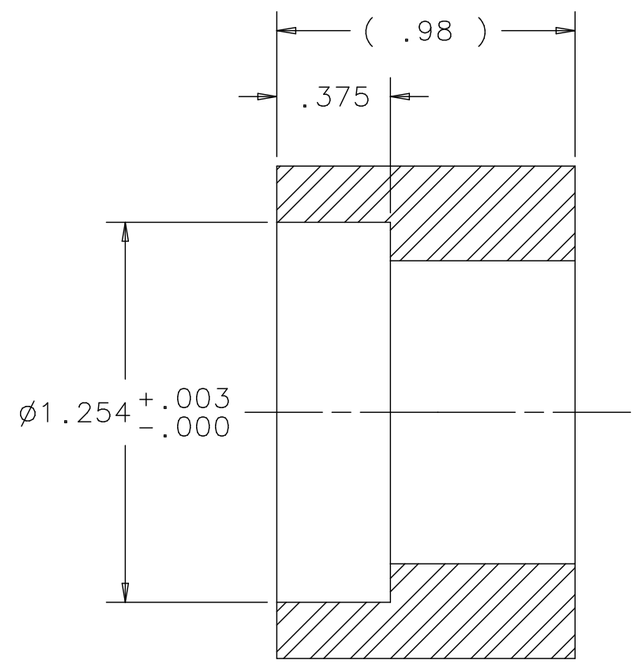


SECTION A-A
SCALE 2:1

| UNLESS OTHERWISE SPECIFIED | | | ORIGINATOR | M.MCGEE | 10-DEC-2010 |
|---|---|---|---|---|---|
| .XX | .XXX | ANGLES | DRAWN | R.STEWART | 10-DEC-2010 |
| ± .01 | ± .005 | ± .5° | CHECKED | M.MCGEE | 27-DEC-2010 |
| | | | APPROVED | M.MARTENS | 27-DEC-2010 |

1. BREAK ALL SHARP EDGES .015 MAX.
2. DO NOT SCALE DRAWING.
3. DIMENSIONS BASED UPON ASME Y14.5M-1994
4. MAX. ALL MACH. SURFACES 63
5. DRAWING UNITS: U.S. INCH

USED ON: MD-433676

MATERIAL: 1-8 UNC HEAVY HEX NUT 316
MCMASTER-CARR P/N 91850A038 OR EQ

C

FERMI NATIONAL ACCELERATOR LABORATORY
UNITED STATES DEPARTMENT OF ENERGY

# NOVA-ANU TARGET HALL
# MEDIUM ENERGY TARGET BAFFLE
# US WATER TUBE NUT

| SCALE | DRAWING NUMBER | SHEET | REV |
|---|---|---|---|
| 2:1 | 8875.112-MB-433683 | 1 OF 1 | C |

CREATED WITH : Ideas12NXSeries | GROUP: ACCELERATOR MECH. SUPPT.