REV	DESCRIPTION	DRAWN	DATE
		APPROVED	DATE

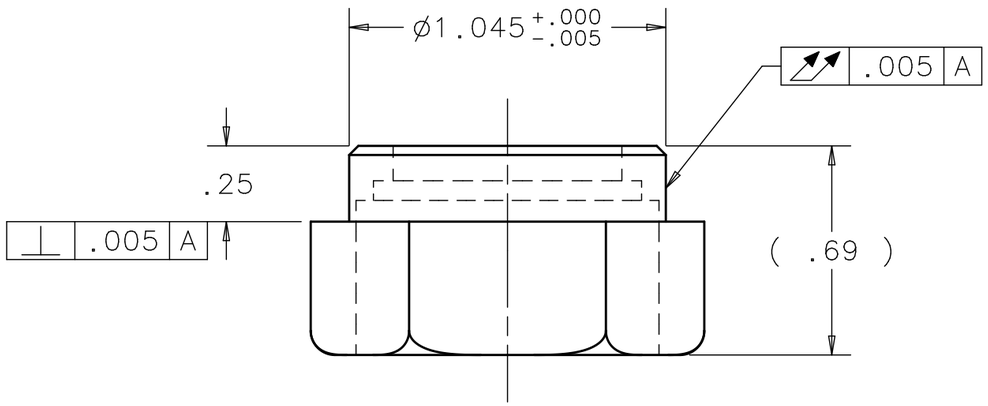

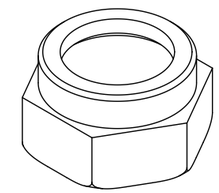

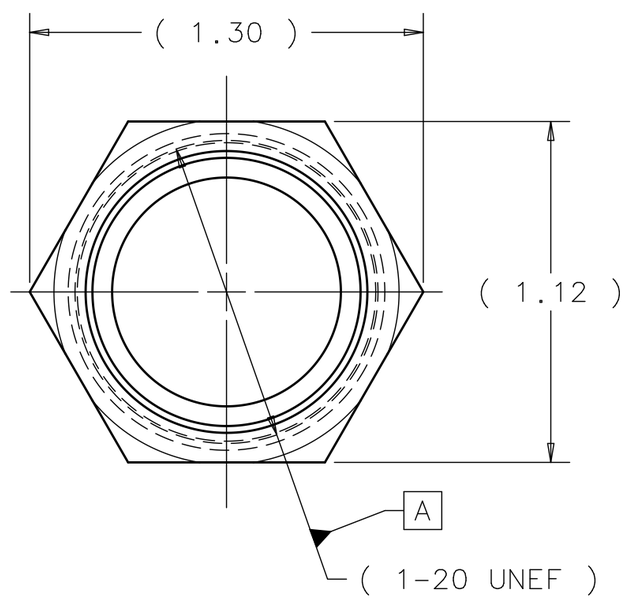

UNLESS OTHERWISE SPECIFIED			ORIGINATOR	M.MCGEE	08-DEC-2010
.XX	.XXX	ANGLES	DRAWN	R.STEWART	08-DEC-2010
± .02	± .005	± 1°	CHECKED	M.MCGEE	27-DEC-2010
			APPROVED	M.MARTENS	27-DEC-2010

1. BREAK ALL SHARP EDGES .015 MAX.
2. DO NOT SCALE DRAWING.
3. DIMENSIONS BASED UPON ASME Y14.5M-1994
4. MAX. ALL MACH. SURFACES 125
5. DRAWING UNITS: U.S. INCH

USED ON: MD-433676

MATERIAL: SWAGELOK SS-1212-1 3/4" NUT 316L

FERMI NATIONAL ACCELERATOR LABORATORY
UNITED STATES DEPARTMENT OF ENERGY

NOVA-ANU TARGET HALL MEDIUM ENERGY TARGET BAFFLE U.S. REMOTE CONNECTOR WELD NUT

SCALE	DRAWING NUMBER	SHEET	REV
2:1	8875.112-MB-433681	1 OF 1	

CREATED WITH : Ideas12NXSeries GROUP: ACCELERATOR MECH. SUPPT.

Created: 10:16:41 on 22-02-13 (D-M-Y) By: rstewart State: 3-RELEASED