REV	DESCRIPTION	DRAWN	DATE
		APPROVED	DATE
A	ø1.260 DIMENSION WAS ø1.325	R.STEWART	25-FEB-2011
		M.MCGEE	25-FEB-2011
B	ø1.254 DIM WAS ø1.260, AND ø1.047 DIM WAS ø1.050	R.STEWART	24-FEB-2012
		M.MCGEE	28-FEB-2012

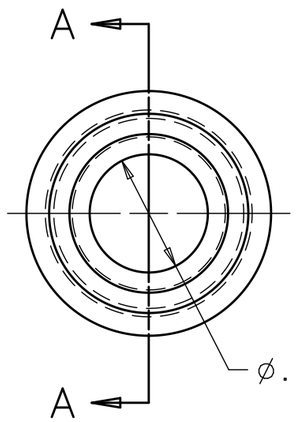

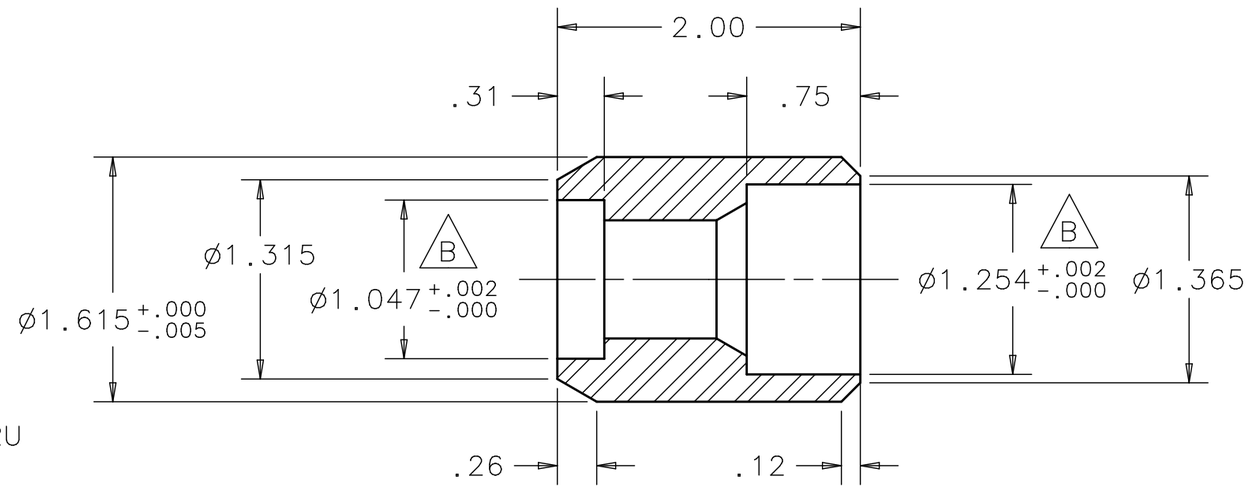

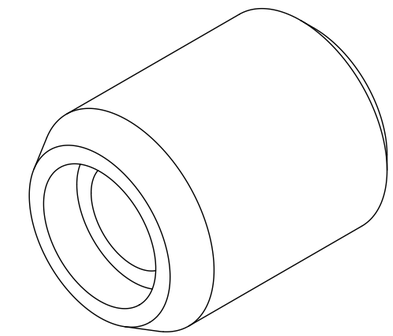

UNLESS OTHERWISE SPECIFIED			ORIGINATOR	M.MCGEE	11-MAR-2010
.XX	.XXX	ANGLES	DRAWN	R.STEWART	30-SEP-2010
± .02	± .005	± 1°	CHECKED	M.MCGEE	27-DEC-2010
			APPROVED	M.MARTENS	27-DEC-2010

1. BREAK ALL SHARP EDGES .015 MAX.
2. DO NOT SCALE DRAWING.
3. DIMENSIONS BASED UPON ASME Y14.5M-1994
4. MAX. ALL MACH. SURFACES 125
5. DRAWING UNITS: U.S. INCH

USED ON: MD-433676

MATERIAL: 316L STAINLESS STEEL

FERMI NATIONAL ACCELERATOR LABORATORY
UNITED STATES DEPARTMENT OF ENERGY

NOVA-ANU TARGET HALL
MEDIUM ENERGY TARGET BAFFLE
U.S. REMOTE WATER LINE SINKER

SCALE	DRAWING NUMBER	SHEET	REV
FULL	8875.112-MB-433680	1 OF 1	B

CREATED WITH : Ideas12NXSeries | GROUP: ACCELERATOR MECH. SUPPT.