REV	DESCRIPTION	DRAWN	DATE
		APPROVED	DATE
A	ø1.510 DIM WAS ø1.670	R.STEWART	25-FEB-2011
		M.MCGEE	25-FEB-2011
B	ø1.504 DIM WAS ø1.510	R.STEWART	24-FEB-2012
		M.MCGEE	28-FEB-2012

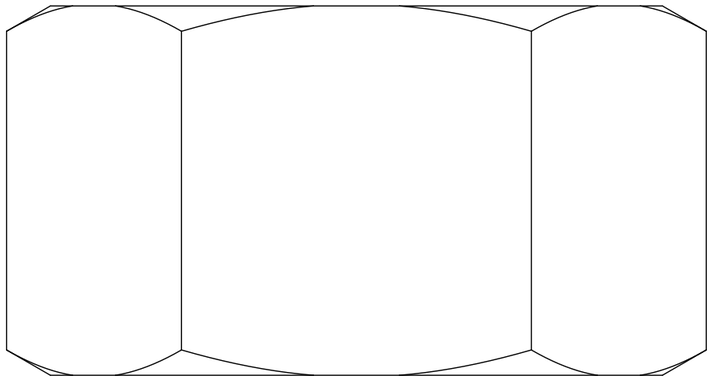

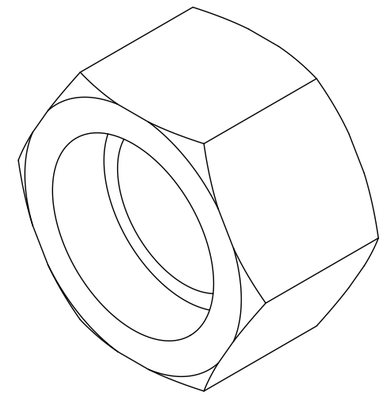

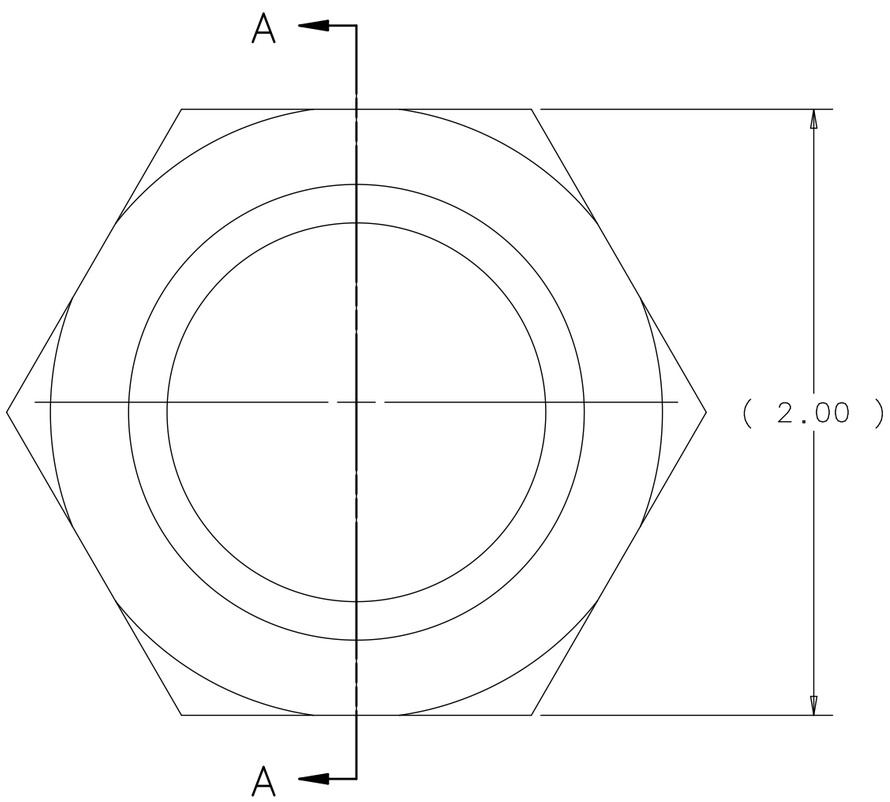

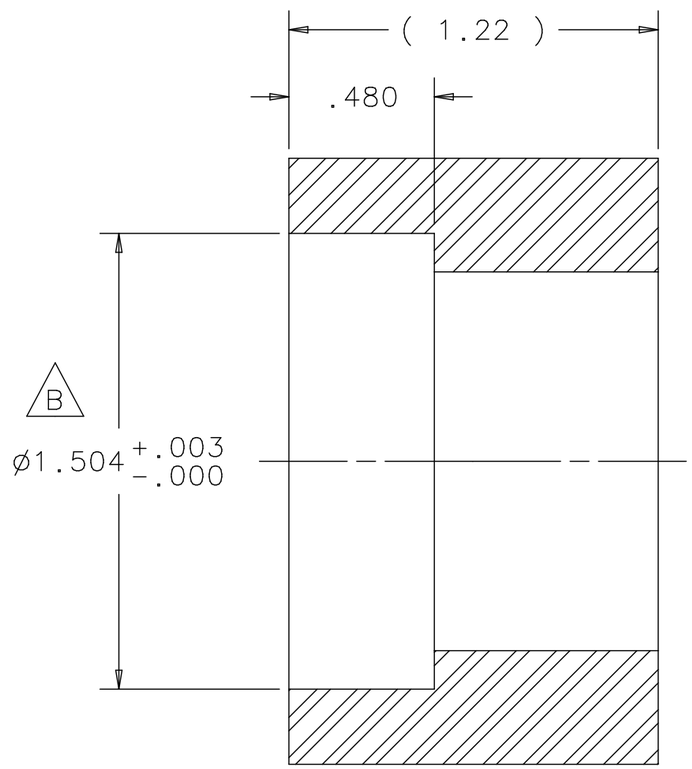

SECTION A-A
SCALE 2:1

UNLESS OTHERWISE SPECIFIED			ORIGINATOR	M.MCGEE	08-DEC-2010
.XX	.XXX	ANGLES	DRAWN	R.STEWART	08-DEC-2010
± .01	± .005	± .5°	CHECKED	M.MCGEE	27-DEC-2010
			APPROVED	M.MARTENS	27-DEC-2010

1. BREAK ALL SHARP EDGES .015 MAX.
2. DO NOT SCALE DRAWING.
3. DIMENSIONS BASED UPON ASME Y14.5M-1994
4. MAX. ALL MACH. SURFACES 63
5. DRAWING UNITS: U.S. INCH

USED ON: MD-433666

MATERIAL: 1 1/2-6 UNC HEX NUT 316L
MCMASTER-CARR P/N 94804A041 OR EQ

FERMI NATIONAL ACCELERATOR LABORATORY
UNITED STATES DEPARTMENT OF ENERGY

NOVA-ANU TARGET HALL
MEDIUM ENERGY TARGET BAFFLE
DS WATER TUBE NUT

SCALE	DRAWING NUMBER	SHEET	REV
2:1	8875.112-MB-433673	1 OF 1	B

CREATED WITH : Ideas12NXSeries | GROUP: ACCELERATOR MECH. SUPPT.