REV	DESCRIPTION	DRAWN	DATE
		APPROVED	DATE
A	ITEM 2 MADE INTO DRAWING, CUT-OUT AND NOTES ADDED	R.STEWART	14-OCT-2011
		M.MCGEE	04-JAN-2012

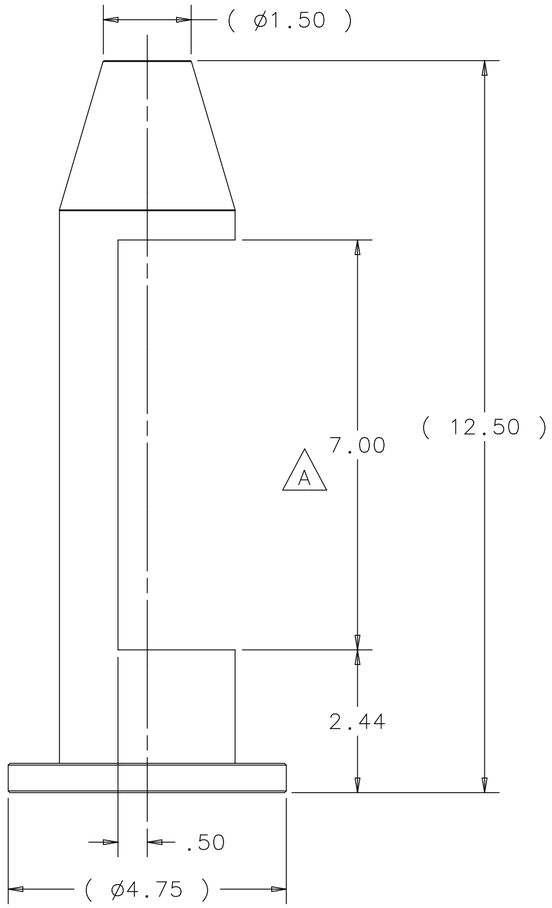

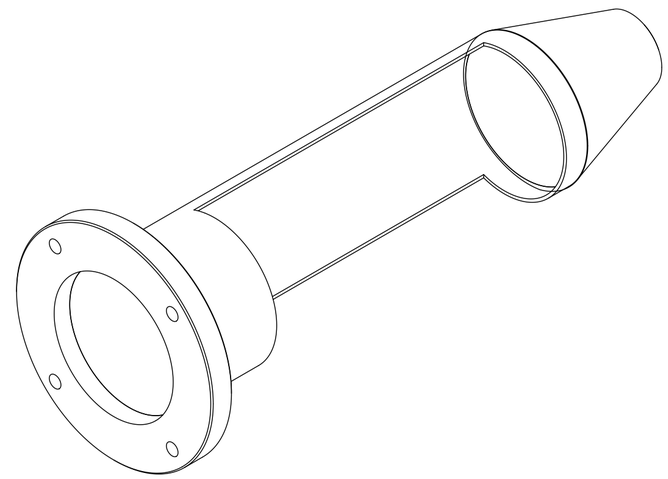

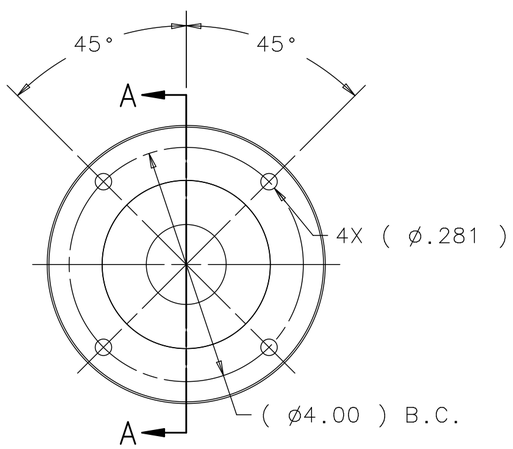

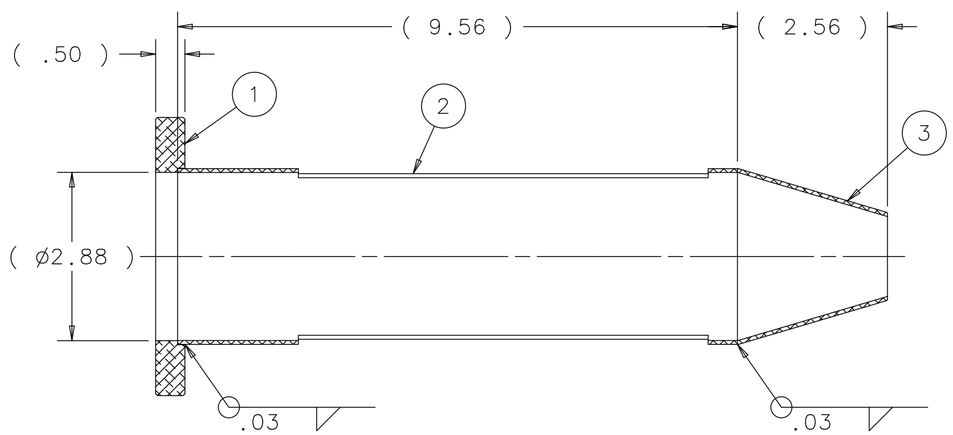

SECTION A-A
SCALE: 1:2

ITEM	PART NO.	DESCRIPTION OR SIZE	QTY.
3	MB-433663	TOOLING BALL FUNNEL	1
2	MB-433811	DOWNSTREAM FUNNEL TUBE	1
1	MB-433662	FRAME HANGER FUNNEL FLANGE	1

PARTS LIST

UNLESS OTHERWISE SPECIFIED					
.XX	.XXX	ANGLES	ORIGINATOR	M.MCGEE	06-DEC-2010
± .01	± .005	± .5	DRAWN	R.STEWART	06-DEC-2010
			CHECKED	M.MCGEE	17-DEC-2010
			APPROVED	M.MARTENS	17-DEC-2010

1. BREAK ALL SHARP EDGES .015 MAX.
2. DO NOT SCALE DRAWING.
3. DIMENSIONS BASED UPON ASME Y14.5M-1994
4. MAX. ALL MACH. SURFACES 63
5. DRAWING UNITS: U.S. INCH

USED ON: ME-433843 - ME-433652

MATERIAL: SEE PARTS LIST ABOVE

FERMI NATIONAL ACCELERATOR LABORATORY
UNITED STATES DEPARTMENT OF ENERGY

NOVA-ANU TARGET HALL MEDIUM ENERGY TARGET FRAME HANGER DS FUNNEL WELDMENT

SCALE	DRAWING NUMBER	SHEET	REV
1:2	8875.112-MC-433661	1 OF 1	A

CREATED WITH : Ideas12NXSeries | GROUP: ACCELERATOR MECH. SUPPT.

A

NOTES:
1. ALL WELDS TO BE PERFORMED BY FERMILAB.
2. USE WELDING ROD ER4043 FOR ALL WELDS.
3. MACHINING TO BE DONE AFTER ALL WELDING.
4. CUT-OUT TO BE WIRE CUT