REV	DESCRIPTION	DRAWN	DATE
		APPROVED	DATE
A	ITEM 2 MADE DRAWING, CUT-OUT AND NOTES ADDED	R.STEWART	29-NOV-2011
		M.MCGEE	04-JAN-2012
B	USED ON ADDED	R.STEWART	13-FEB-2012
		M.MCGEE	13-FEB-2012

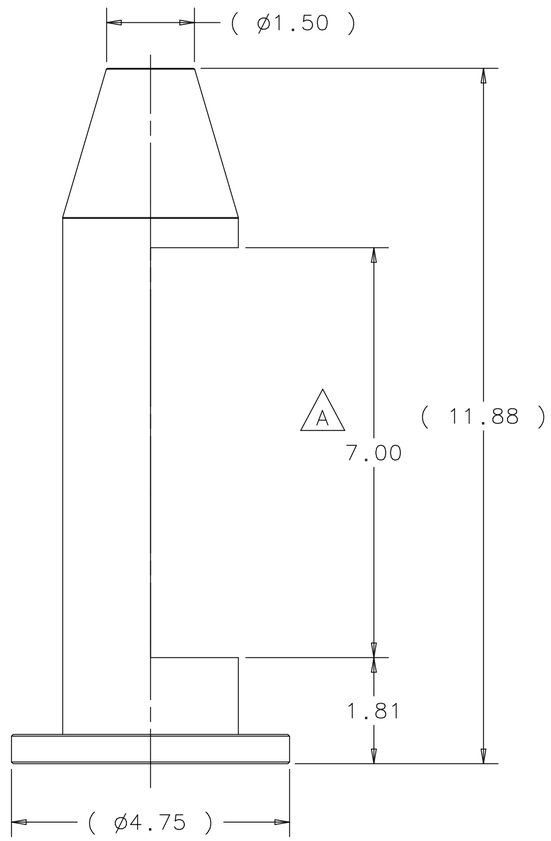

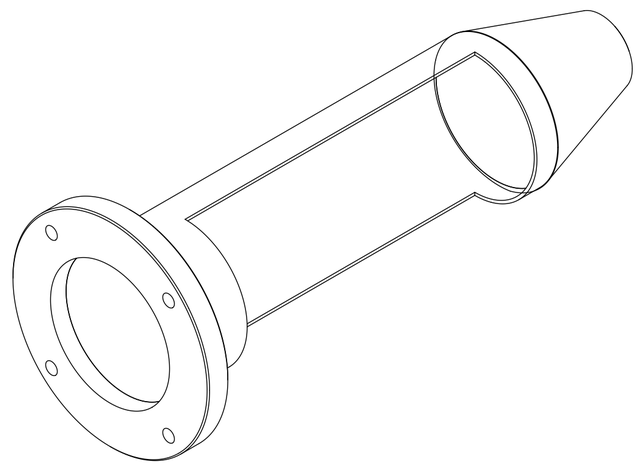

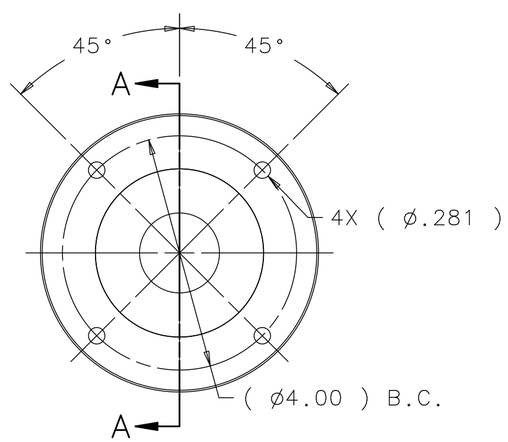

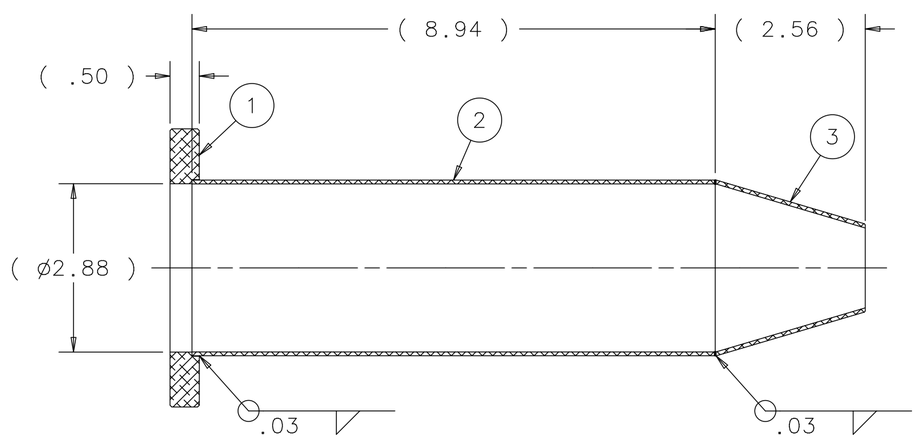

SECTION A-A
SCALE: 1:2

ITEM	PART NO.	DESCRIPTION OR SIZE	QTY.
3	MB-433663	TOOLING BALL FUNNEL	1
2	MB-433866	UPSTREAM FUNNEL TUBE	1
1	MB-433662	FRAME HANGER FUNNEL FLANGE	1

PARTS LIST

UNLESS OTHERWISE SPECIFIED					
.XX	.XXX	ANGLES	ORIGINATOR	M.MCGEE	06-DEC-2010
± .01	± .005	± .5°	DRAWN	R.STEWART	06-DEC-2010
			CHECKED	M.MCGEE	17-DEC-2010
			APPROVED	M.MARTENS	17-DEC-2010

1. BREAK ALL SHARP EDGES .015 MAX.
2. DO NOT SCALE DRAWING.
3. DIMENSIONS BASED UPON ASME Y14.5M-1994
4. MAX. ALL MACH. SURFACES 63
5. DRAWING UNITS: U.S. INCH

USED ON: ME-433652 - ME-433843 (B)

MATERIAL: SEE PARTS LIST ABOVE

FERMI NATIONAL ACCELERATOR LABORATORY
UNITED STATES DEPARTMENT OF ENERGY

NOVA-ANU TARGET HALL
MEDIUM ENERGY TARGET BAFFLE
FRAME HANGER US FUNNEL WELDMENT

SCALE	DRAWING NUMBER	SHEET	REV
1:1	8875.112-MC-433660	1 OF 1	B

CREATED WITH : Ideas12NXSeries | GROUP: ACCELERATOR MECH. SUPPT.

NOTES:
1. ALL WELDS TO BE PERFORMED BY FERMILAB.
2. USE WELDING ROD ER4043 FOR ALL WELDS. (A)
3. MACHINING TO BE DONE AFTER ALL WELDING.
4. CUT-OUT TO BE WIRE CUT