REV	DESCRIPTION	DRAWN / APPROVED	DATE / DATE
A	SPRING SYSTEM CHANGED	R.STEWART	09-SEP-2013
		M.MCGEE	09-SEP-2013

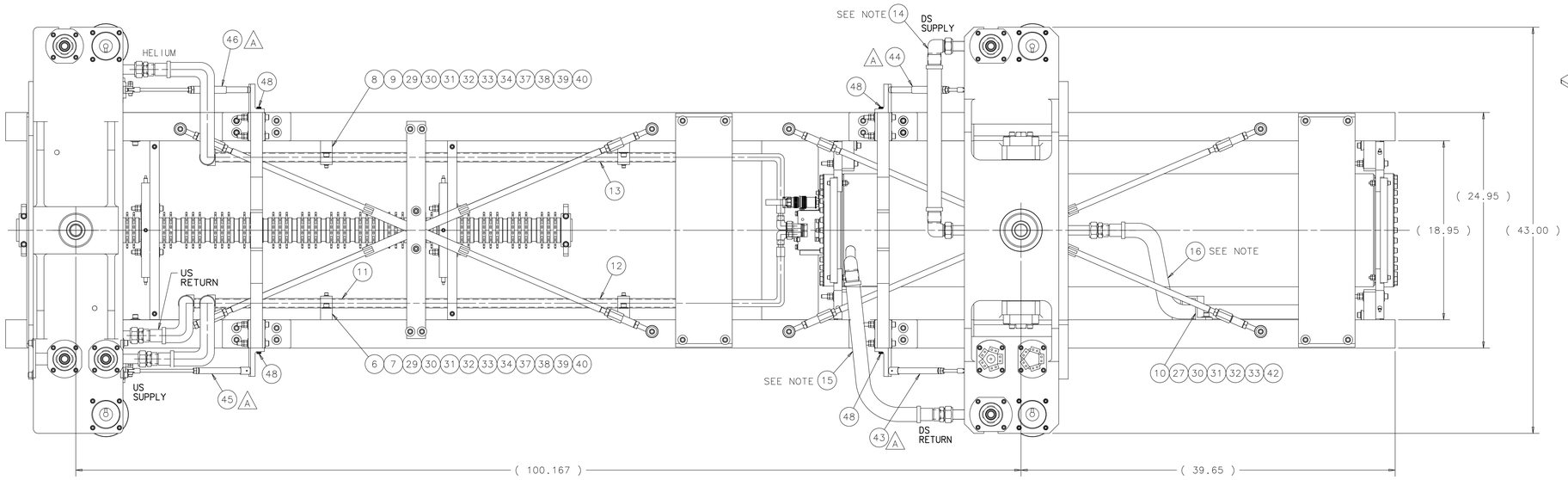

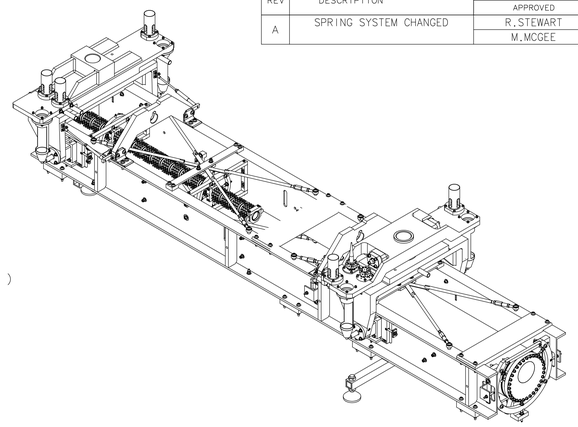

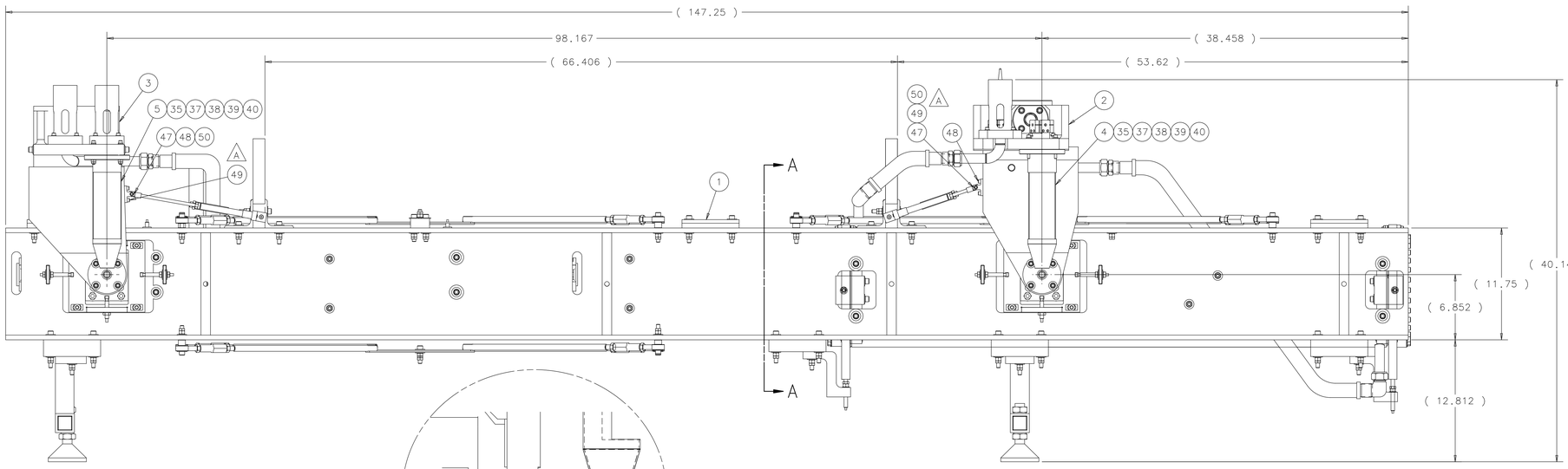

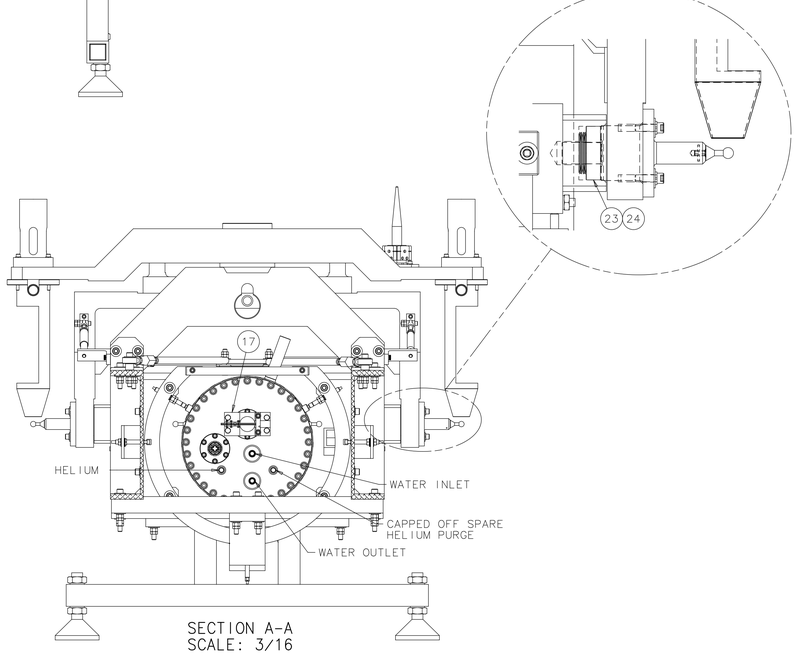

SECTION A-A
SCALE: 3/16

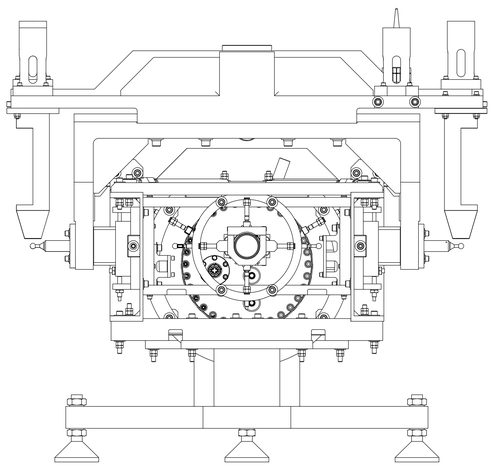

UPSTREAM END
SCALE: 3/16

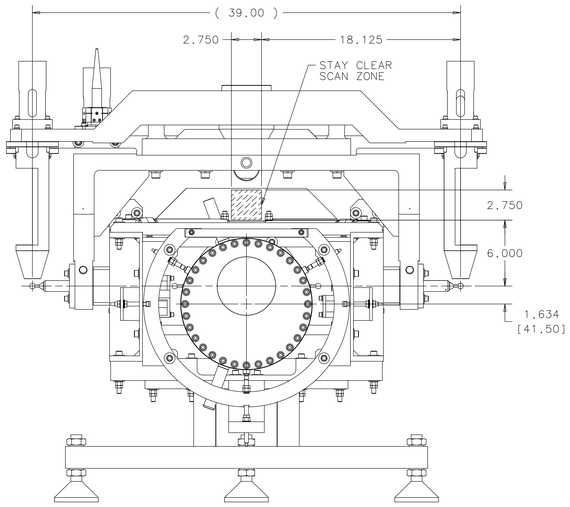

DOWNSTREAM END
SCALE: 3/16

ITEM	PART NO.	DESCRIPTION OR SIZE	QTY.
50	MCMASTER-CARR P/N 92185A544 OR EQ.	1/4-20 UNC X 1.25 LG. SHCS 316 SS	4
49	MCMASTER-CARR P/N 92185A242 OR EQ.	#10-24 UNC X .50 LG. SHCS 316 SS	8
48	MCMASTER-CARR P/N 97345A571 OR EQ.	ø5/16" X 3/8" SHOULDER SCREW 316 SS	4
47	MB-433958	PUSH PULL CLEVIS BRACKET	4
46	MC-433976	SPRING PUSH ASSEMBLY US	1
45	MC-433974	SPRING PULL ASSEMBLY US	1
44	MC-433975	SPRING PUSH ASSEMBLY DS	1
43	MC-433973	SPRING PULL ASSEMBLY DS	1
42	MB-433893	HOSE GUIDE CLAMP	1
~~41~~	~~MCMASTER-CARR P/N 30315T52 OR EQ.~~	~~1/4-20 316 SS TURNBUCKLE~~	~~1~~
39	MCMASTER-CARR P/N 94804A029 OR EQ.	1/4-20 HEX NUT 316L	54
38	SCHNOOR P/N S 6.35 SS	1/4 SCHNORR SAFETY WASHER SS	54
37	MCMASTER-CARR P/N 91525A118 OR EQ.	ø.563 O.D. 1/4 FLAT WASHER 316L	64
~~36~~	~~MCMASTER-CARR P/N 92185A557 OR EQ.~~	~~1/4-20 UNC X 3.00 LG. SHCS 316L~~	~~4~~
35	MCMASTER-CARR P/N 92185A555 OR EQ.	1/4-20 UNC X 2.50 LG. SHCS 316L	16
34	MCMASTER-CARR P/N 92185A537 OR EQ.	1/4-20 UNC X .50 LG. SHCS 316L	8
33	MCMASTER-CARR PN 64805A115 OR EQ.	3/8-16 UNC JAM NUT 316L	12
32	MCMASTER-CARR P/N 94804A320 OR EQ.	3/8-16 HEX NUT 316L	12
31	SCHNOOR P/N S 10 SS	3/8 SCHNORR SAFETY WASHER SS	12
30	MCMASTER-CARR PN 90107A031 OR EQ.	ø.875 O.D. 3/8 FLAT WASHER 316L	34
29	MCMASTER-CARR P/N 92185A634 OR EQ.	3/8-16 UNC X 2.50 LG. SHCS 316L	8
~~28~~	~~MCMASTER-CARR P/N 92185A632 OR EQ.~~	~~3/8-16 UNC X 2.00 LG. SHCS 316L~~	~~8~~
27	MCMASTER-CARR P/N 92185A628 OR EQ.	3/8-16 UNC X 1.50 LG. SHCS 316L	2
~~26~~	~~MCMASTER-CARR P/N 8891T72 OR EQ.~~	~~LIFTING EYEBOLT 1/4-20 UNC 316L~~	~~2~~
~~25~~	~~LEE SPRINGS P/N LE 125JK 015~~	~~ø.130 WIRE EXTENSION SPRING SS~~	~~4~~
24	MCMASTER-CARR P/N 97125K79 OR EQ.	ø2.00 INCONEL BELLEVILLE DISC	16
23	TINKEN P/N A 305K DRY	ø2.44 OD 300K SERIES BEARING SS	4
~~22~~	~~MB-433850~~	~~SPRING TENSION CLAMP~~	~~4~~
~~21~~	~~MB-433849~~	~~SPRING BRACKET PLATE~~	~~1~~
~~20~~	~~MB-433848~~	~~UPSTREAM SPRING BRACKET~~	~~2~~
~~19~~	~~MB-433847~~	~~DOWNSTREAM SPRING BRACKET~~	~~2~~
~~18~~	~~MB-433846~~	~~HANGER SPRING BRACKET~~	~~4~~
17	MC-488599	TARGET VERTCIAL POSITION THERMOMETER ASSEMBLY (TVPT)	1
16	MB-433890	DS TARGET HOSE WELDMENT	1
15	MB-433888	DS RETURN HOSE WELDMENT	1
14	MB-433889	DS SUPPLY HOSE WELDMENT	1
13	MB-433880	HELIUM LINE WELDMENT	1
12	MB-433879	WATER RETURN LINE WELDMENT	1
11	MB-433854	WATER SUPPLY LINE WELDMENT	1
10	MB-433859	WATER LINE GUIDE	1
9	MB-433858	HELIUM LINE CLAMP	2
8	MB-433857	HELIUM LINE BRACKET	2
7	MB-433856	WATER LINE CLAMP	2
6	MC-433855	WATER LINE BRACKET	2
5	MC-433660	UPSTREAM FUNNEL WELDMENT	2
4	MC-433661	DOWNSTREAM FUNNEL WELDMENT	2
3	MD-433565	US FRAME HANGER ASSEMBLY	1
2	MD-433577	DS FRAME HANGER ASSEMBLY	1
1	ME-433836	TARGET CARRIER PHASE 2	1

PARTS LIST

UNLESS OTHERWISE SPECIFIED			
ORIGINATOR	M.MCGEE	12-OCT-2011
DRAWN	R.STEWART	12-OCT-2011
CHECKED	M.MCGEE	22-AUG-2012
APPROVED	M.MCGEE	22-AUG-2012

± ± ±

1. BREAK ALL SHARP EDGES MAX.
2. DO NOT SCALE DRAWING.
3. DIMENSIONS BASED UPON ASME Y14.5M-1994
4. MAX. ALL MACH. SURFACES
5. DRAWING UNITS: U.S. INCH

USED ON

MATERIAL: SEE PARTS LIST ABOVE

FERMI NATIONAL ACCELERATOR LABORATORY
UNITED STATES DEPARTMENT OF ENERGY

NOVA-ANU TARGET HALL
MEDIUM ENERGY TARGET
TARGET CARRIER PHASE 3

SCALE	DRAWING NUMBER	SHEET	REV
3:16	8875.112-ME-433843	1 OF 1	A

CREATED WITH : Ideas12NXSeries | GROUP: ACCELERATOR MECH. SUPPT.

NOTES:
1. STAINLESS STEEL TO ALUMINUM HOSE CONNECTIONS MUST USE ALUMINUM FERRULES
2. WEIGHT: 1,100 LBS.