REV	DESCRIPTION	DRAWN	DATE
		APPROVED	DATE

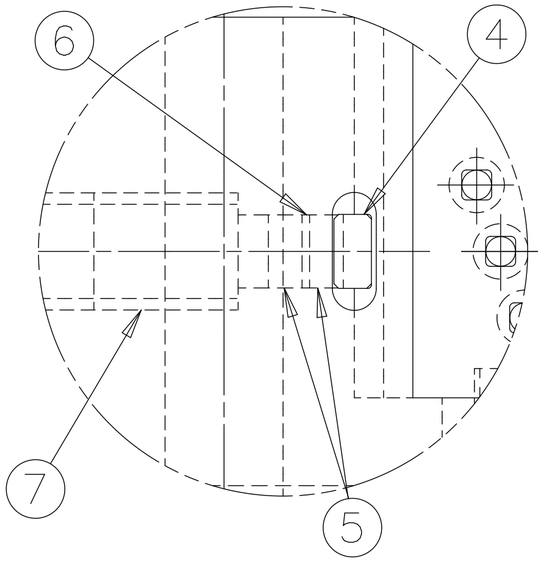

DETAIL 'X'

SCALE: 4X

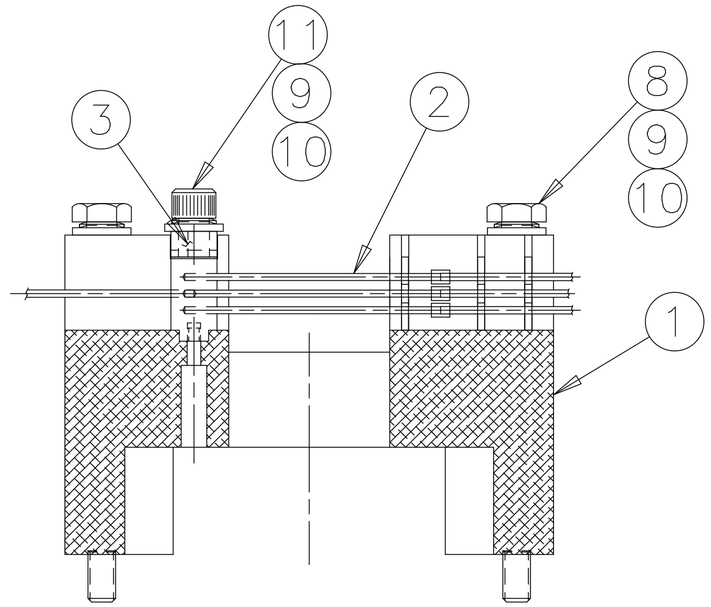

SECTION 'A-A'

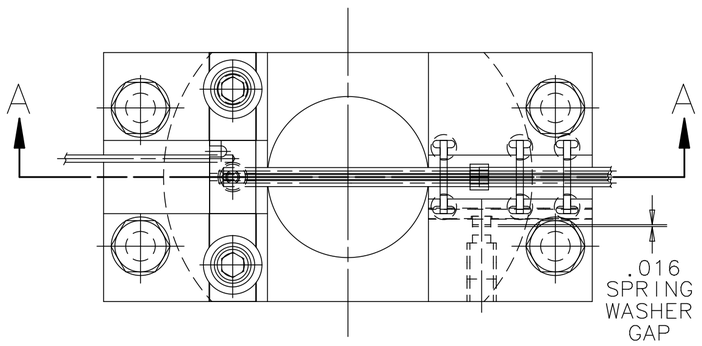

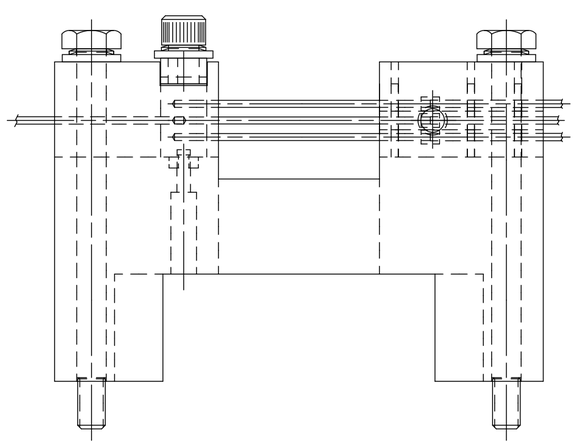

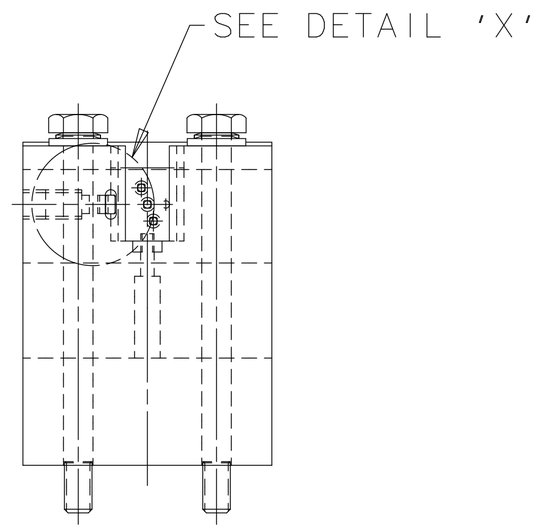

ITEM	PART NO.	DESCRIPTION OR SIZE	QTY.
11	-----	#1/4-20UNC X 3/4" LG. SHCS	2
10	McMaster-Carr #92161A029	BELLEVILLE WASHER	6
9	-----	1/4 I.D. FLAT WASHER	6
8	MB-488603	MOUNTING BOLT	4
7	-----	#1/4-20 SET SCREW, DOG POINT	1
6		PRESS PLATE SPRING WASHER	A/R
5	MB-488606	PRESS PLATE WASHER	2
4	MB-488605	PRESS PLATE	1
3	MB-488596	PRESS BAR	1
2	MD-488520	WIRING	1
1	MD-488519	HOUSING	1

PARTS LIST

UNLESS OTHERWISE SPECIFIED					
.XX	.XXX	ANGLES	ORIGINATOR	M.MCGEE	12-JUN-2012
± .02	± .005	± 1/2°	DRAWN	G.WAVER	12-JUN-2012
			CHECKED	M.MCGEE	05-DEC-2012
			APPROVED	M.MCGEE	05-DEC-2012

1. BREAK ALL SHARP EDGES .015 MAX.
2. DO NOT SCALE DRAWING.
3. DIMENSIONS BASED UPON ASME Y14.5M-1994
4. MAX. ALL MACH. SURFACES 125
5. DRAWING UNITS: U.S. INCH

USED ON: ME-433843

MATERIAL: SEE PARTS LIST

FERMI NATIONAL ACCELERATOR LABORATORY
UNITED STATES DEPARTMENT OF ENERGY

ANU 700KW - TARGET VERTICAL POSITION THERMOMETER FINAL ASSEMBLY

SCALE	DRAWING NUMBER	SHEET	REV
FULL	8875.115-MC-488599	1 OF 1	

CREATED WITH : Ideas12NXSeries | GROUP: ACCELERATOR MECH. SUPPT.