REV	DESCRIPTION	DRAWN	DATE
		APPROVED	DATE

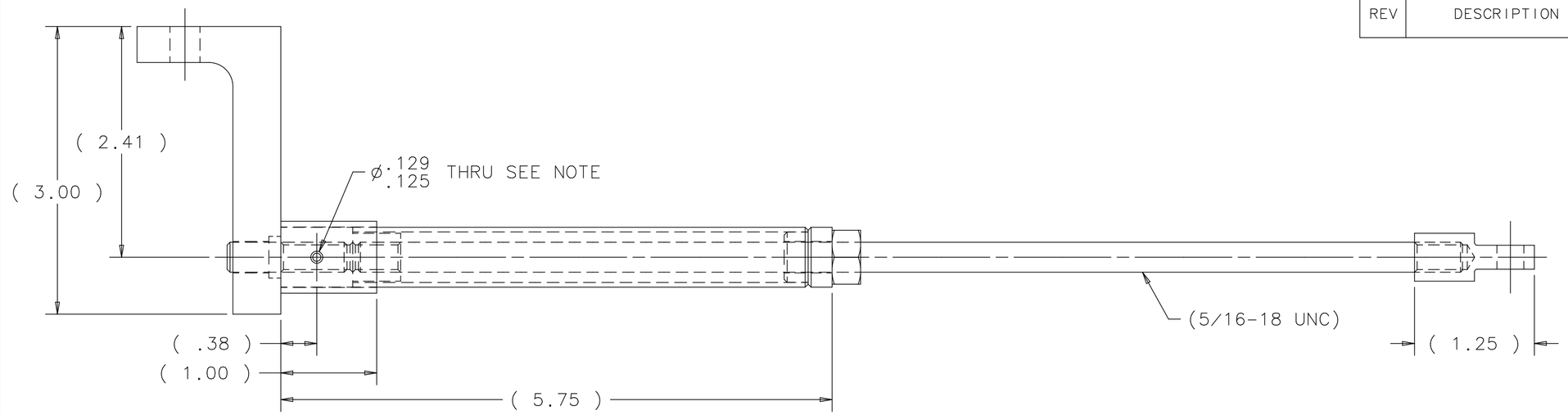

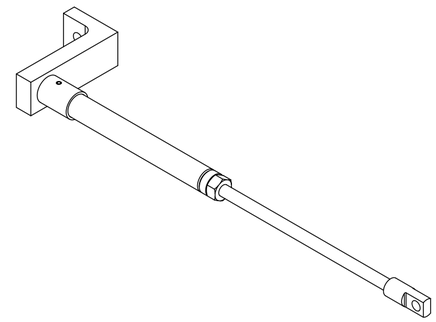

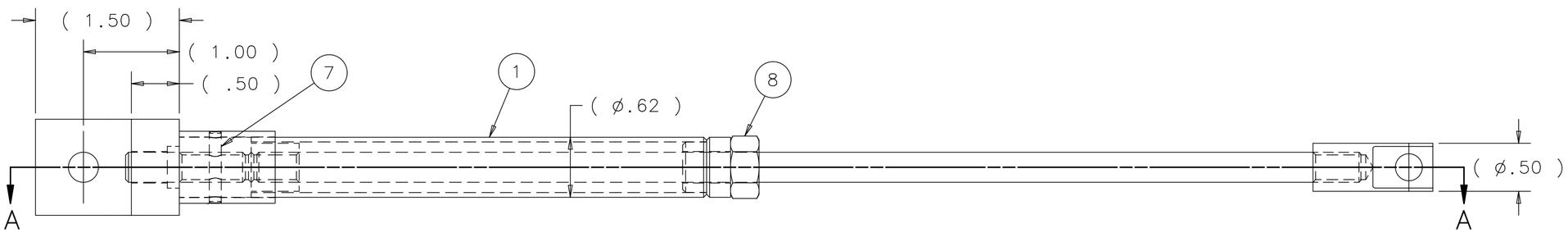

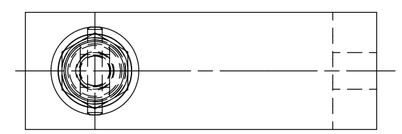

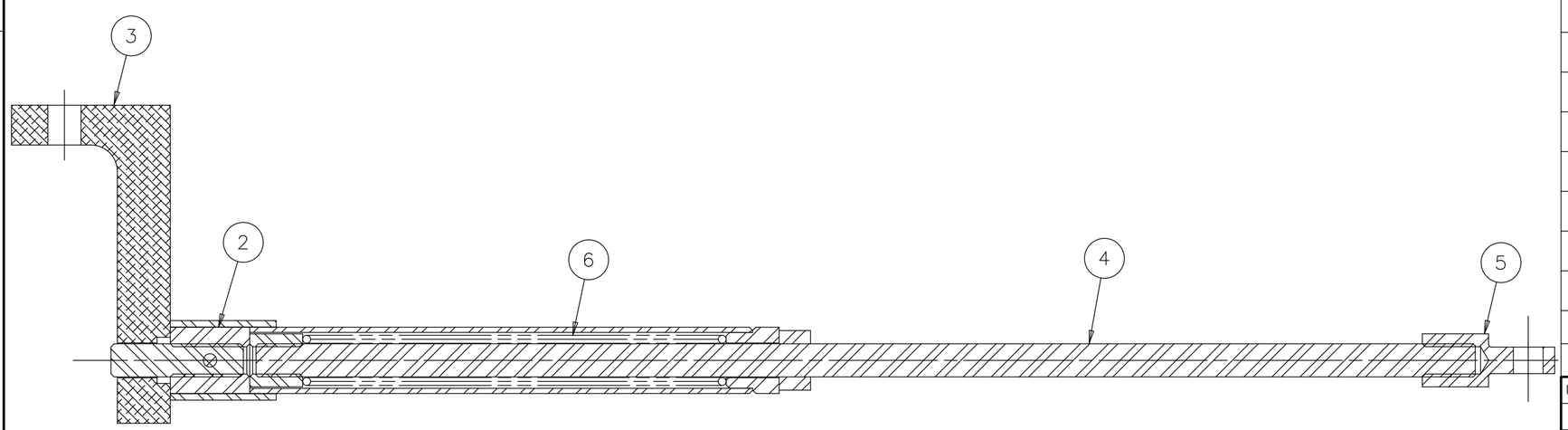

SECTION A-A
SCALE 1:

NOTE: DRILL ITEMS 1 AND 2 TOGETHER USING PILOT HOLE IN ITEM 1 AND PIN USING ITEM 7

ITEM	PART NO.	DESCRIPTION OR SIZE	QTY.
8	MCMASTER-CARR PN 94804A030	5/16-18 UNC 316 SS HEX NUT	1
7	MCMASTER-CARR PN 92373A181	1/8 OD X .75 LONG 18-8 SS SPRING PIN	1
6	LEE SPRING PN LHL 500A 10	ø.473 OD X .075 WIRE COMPRESSION SPRING	1
5	MB-433992	PUSH PULL CLEVIS	1
4	MB-433978	PULL THREADED ROD WELDMENT	1
3	MB-433949	SUPPORT BRACKET	1
2	MB-4333983	SPRING TUBE PLUG WELDMENT	1
1	MB-433981	PULL SPRING TUBE WELDMENT	1

PARTS LIST

UNLESS OTHERWISE SPECIFIED			ORIGINATOR	K.ANDERSON	22-JUL-2013
.XX	.XXX	ANGLES	DRAWN	R.STEWART	22-JUL-2013
± .01	± .005	± .25°	CHECKED	K.ANDERSON	26-JUL-2013
			APPROVED	M.MCGEE	26-JUL-2013

1. BREAK ALL SHARP EDGES .015 MAX.
2. DO NOT SCALE DRAWING.
3. DIMENSIONS BASED UPON ASME Y14.5M-1994
4. MAX. ALL MACH. SURFACES 63
5. DRAWING UNITS: U.S. INCH

USED ON: ME-433843

MATERIAL: SEE PARTS LIST ABOVE

FERMI NATIONAL ACCELERATOR LABORATORY
UNITED STATES DEPARTMENT OF ENERGY

NOVA-ANU TARGET HALL MEDIUM ENERGY TARGET SPRING PULL ASSEMBLY US

SCALE	DRAWING NUMBER	SHEET	REV
1:1	8875.000-MC-433974	1 OF 1	

CREATED WITH : Ideas12NXSeries | GROUP: ACCELERATOR MECH. SUPPT.