REV	DESCRIPTION	DRAWN	DATE
		APPROVED	DATE

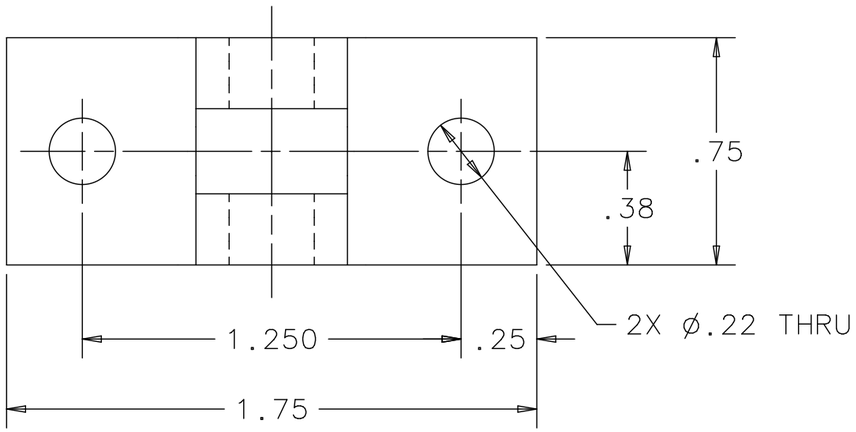

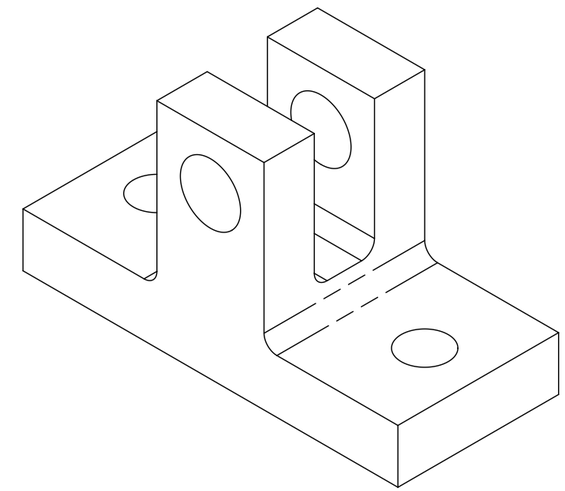

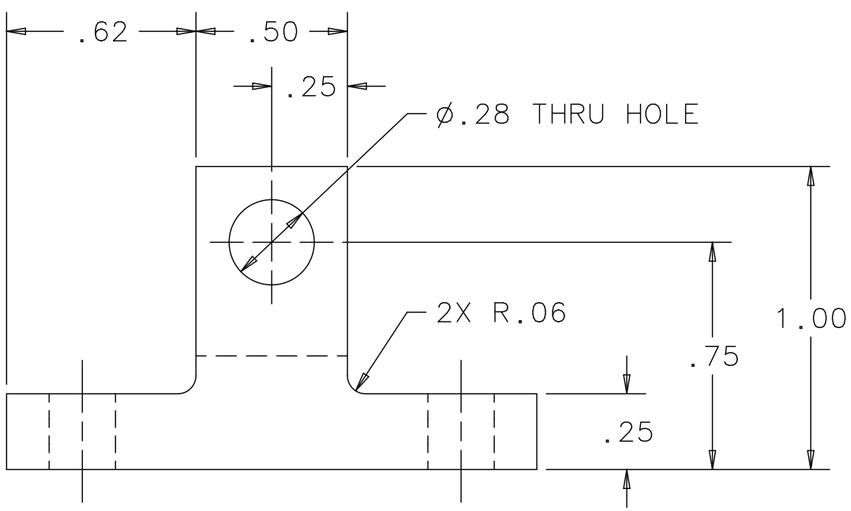

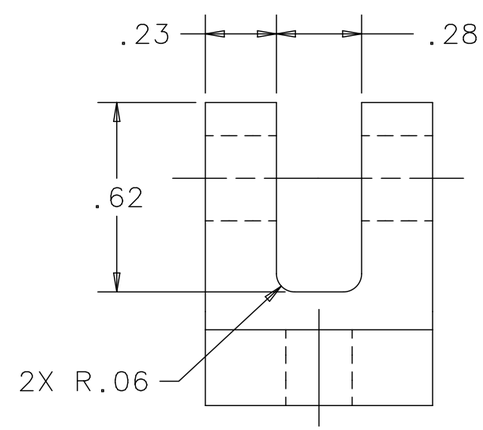

UNLESS OTHERWISE SPECIFIED			ORIGINATOR	M.MCGEE	26-APR-2013
.XX	.XXX	ANGLES	DRAWN	R.STEWART	26-APR-2013
± .01	± .005	± .25°	CHECKED	K.ANDERSON	26-JUL-2013
			APPROVED	M.MCGEE	26-JUL-2013

1. BREAK ALL SHARP EDGES .015 MAX.
2. DO NOT SCALE DRAWING.
3. DIMENSIONS BASED UPON ASME Y14.5M-1994
4. MAX. ALL MACH. SURFACES 63
5. DRAWING UNITS: U.S. INCH

USED ON: ME-433843

MATERIAL: 316 STAINLESS STEEL

FERMI NATIONAL ACCELERATOR LABORATORY
UNITED STATES DEPARTMENT OF ENERGY

NOVA-ANU TARGET HALL MEDIUM ENERGY TARGET PUSH PULL CLEVIS BRACKET

SCALE	DRAWING NUMBER	SHEET	REV
2:1	8875.112-MB-433958	1 OF 1	

CREATED WITH : Ideas12NXSeries | GROUP: ACCELERATOR MECH. SUPPT.

Created: 13:26:13 on 26-07-13 (D-M-Y) By: rstewart State: 3-RELEASED