REV	DESCRIPTION	DRAWN	DATE
		APPROVED	DATE

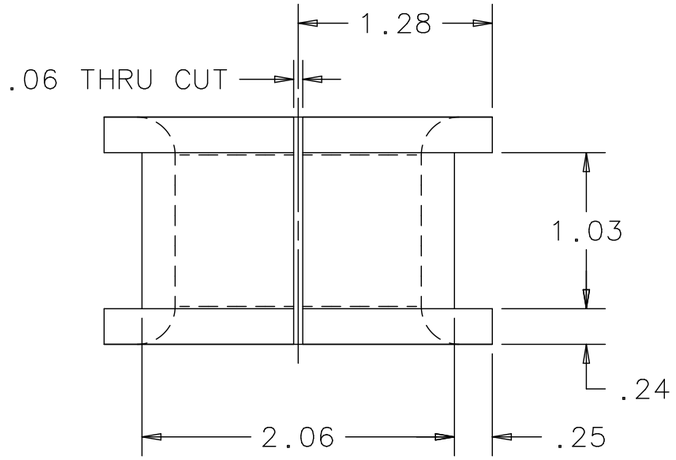

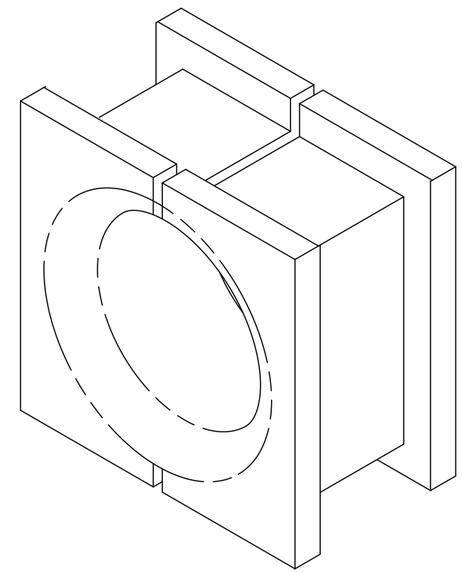

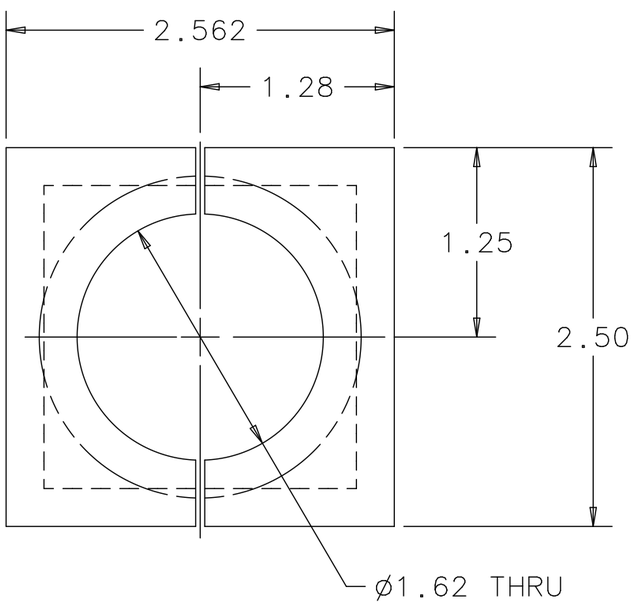

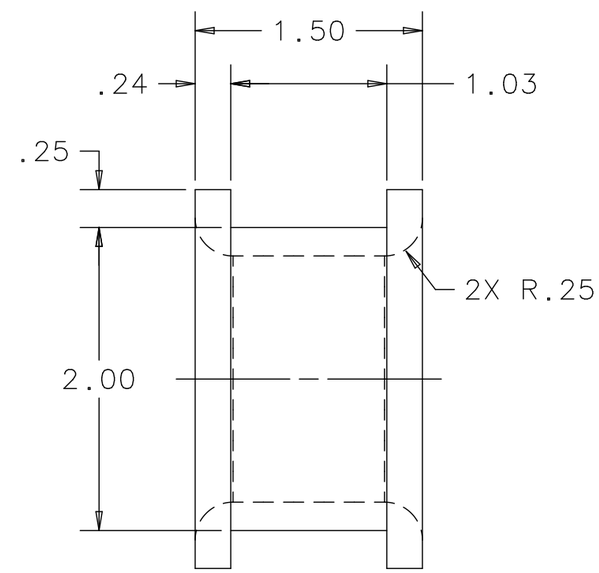

UNLESS OTHERWISE SPECIFIED			ORIGINATOR	F.SCHNEIDER	10-AUG-2012
.XX	.XXX	ANGLES	DRAWN	R.STEWART	10-AUG-2012
± .01	± .005	± .5°	CHECKED	F.SCHNEIDER	22-AUG-2012
1. BREAK ALL SHARP EDGES .015 MAX. 2. DO NOT SCALE DRAWING. 3. DIMENSIONS BASED UPON ASME Y14.5M-1994 4. MAX. ALL MACH. SURFACES 63 5. DRAWING UNITS: U.S. INCH			APPROVED	M.MCGEE	22-AUG-2012
			USED ON	ME-433843	
			MATERIAL	6061-T6 ALUMINUM	

FERMI NATIONAL ACCELERATOR LABORATORY
UNITED STATES DEPARTMENT OF ENERGY

NOVA-ANU TARGET HALL MEDIUM ENERGY TARGET HOSE GUIDE CLAMP

SCALE	DRAWING NUMBER	SHEET	REV
1:1	8875.112-MB-433893	1 OF 1	

CREATED WITH : Ideas12NXSeries GROUP: ACCELERATOR MECH. SUPPT.

Created: 14:49:01 on 21-02-13 (D-M-Y) By: rstewart State: 3-RELEASED