REV	DESCRIPTION	DRAWN	DATE
		APPROVED	DATE

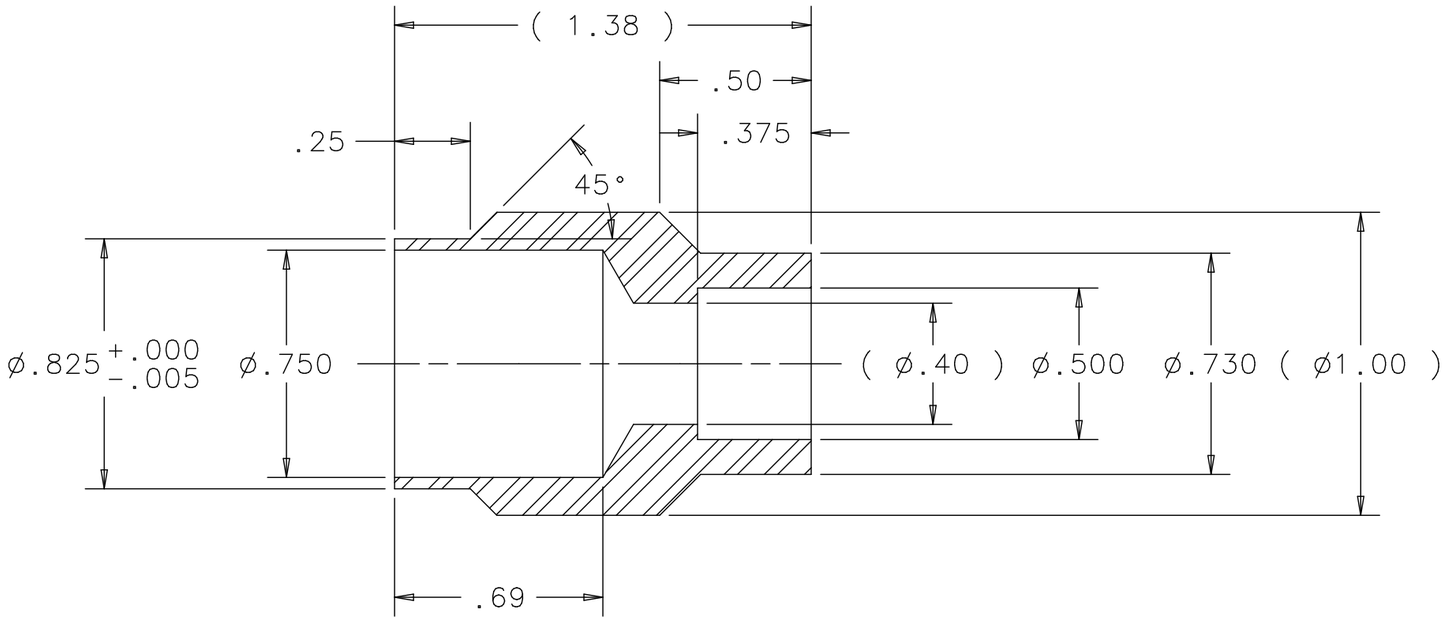

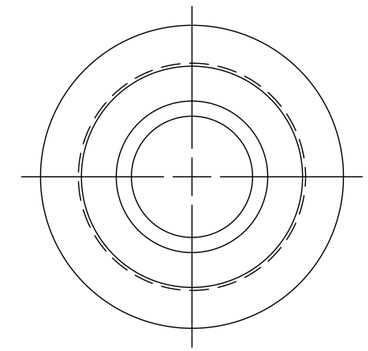

UNLESS OTHERWISE SPECIFIED		
.XX	.XXX	ANGLES
± .02	± .005	± .5°

1. BREAK ALL SHARP EDGES .015 MAX.
2. DO NOT SCALE DRAWING.
3. DIMENSIONS BASED UPON ASME Y14.5M-1994
4. MAX. ALL MACH. SURFACES 63
5. DRAWING UNITS: U.S. INCH

ORIGINATOR	F.SCHNEIDER	22-MAR-2012
DRAWN	R.STEWART	22-MAR-2012
CHECKED	F.SCHNEIDER	22-AUG-2012
APPROVED	M.MCGEE	22-AUG-2012

USED ON
MB-433854 - MB-433879- MB-433880

MATERIAL
BUTT TO SOCKET WELD ADAPTER 316L
SWAGELOK P/N SS-16-MTA-A-8TSW

FERMI NATIONAL ACCELERATOR LABORATORY
UNITED STATES DEPARTMENT OF ENERGY

NOVA-ANU TARGET HALL MEDIUM ENERGY TARGET WELD ADAPTER MODIFIED

SCALE	DRAWING NUMBER	SHEET	REV
2:1	8875.112-MB-433887	1 OF 1	

CREATED WITH : Ideas12NXSeries | GROUP: ACCELERATOR MECH. SUPPT.

Created: 14:46:39 on 21-02-13 (D-M-Y) By: rstewart State: 3-RELEASED