REV	DESCRIPTION	DRAWN	DATE
		APPROVED	DATE
A	.998 DIMENSION WAS 1.03	R.STEWART	08-AUG-2012
	AND 1.00 DIMENSION WAS 1.03	M.MCGEE	08-AUG-2012

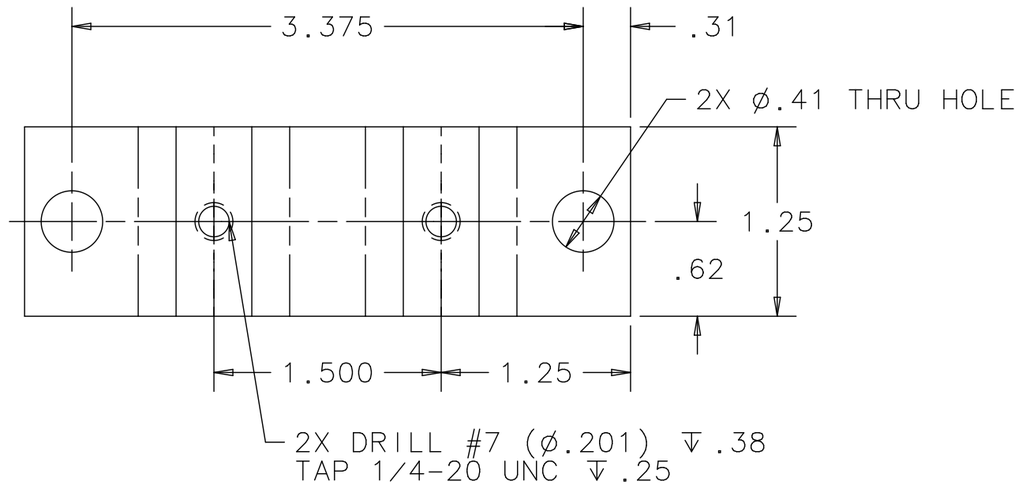

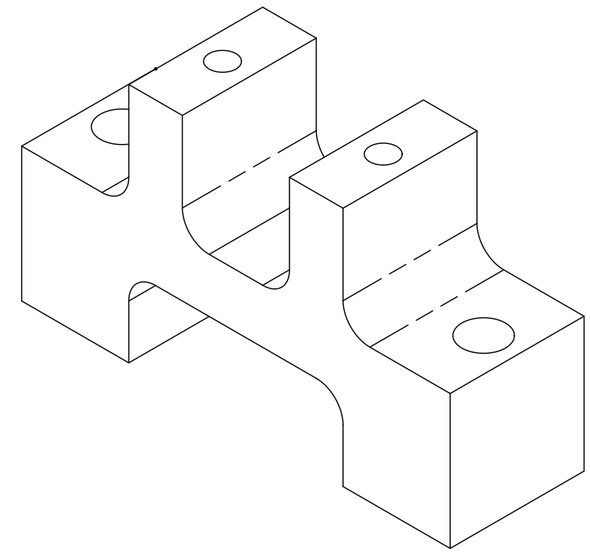

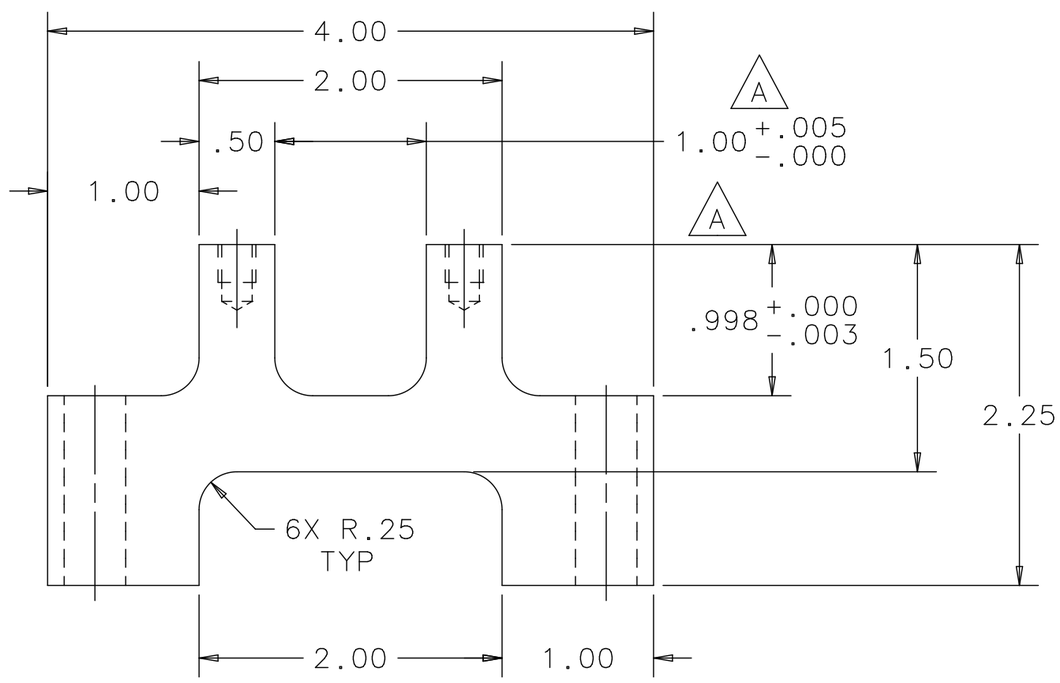

UNLESS OTHERWISE SPECIFIED			ORIGINATOR	M.MCGEE	20-OCT-2011
.XX	.XXX	ANGLES	DRAWN	R.STEWART	20-OCT-2011
± .02	± .005	± .5°	CHECKED	D.SCHMITT	06-JAN-2012
			APPROVED	M.MCGEE	06-JAN-2012

1. BREAK ALL SHARP EDGES .015 MAX.
2. DO NOT SCALE DRAWING.
3. DIMENSIONS BASED UPON ASME Y14.5M-1994
4. MAX. ALL MACH. SURFACES 63
5. DRAWING UNITS: U.S. INCH

USED ON: ME-433843

MATERIAL: 6061-T6 ALUMINUM

FERMI NATIONAL ACCELERATOR LABORATORY
UNITED STATES DEPARTMENT OF ENERGY

NOVA-ANU TARGET HALL MEDIUM ENERGY TARGET HELIUM LINE BRACKET

SCALE	DRAWING NUMBER	SHEET	REV
1:1	8875.112-MB-433857	1 OF 1	A

CREATED WITH : Ideas12NXSeries | GROUP: ACCELERATOR MECH. SUPPT.

Created: 14:44:47 on 21-02-13 (D-M-Y) By: rstewart State: 3-RELEASED