REV	DESCRIPTION	DRAWN	DATE
		APPROVED	DATE

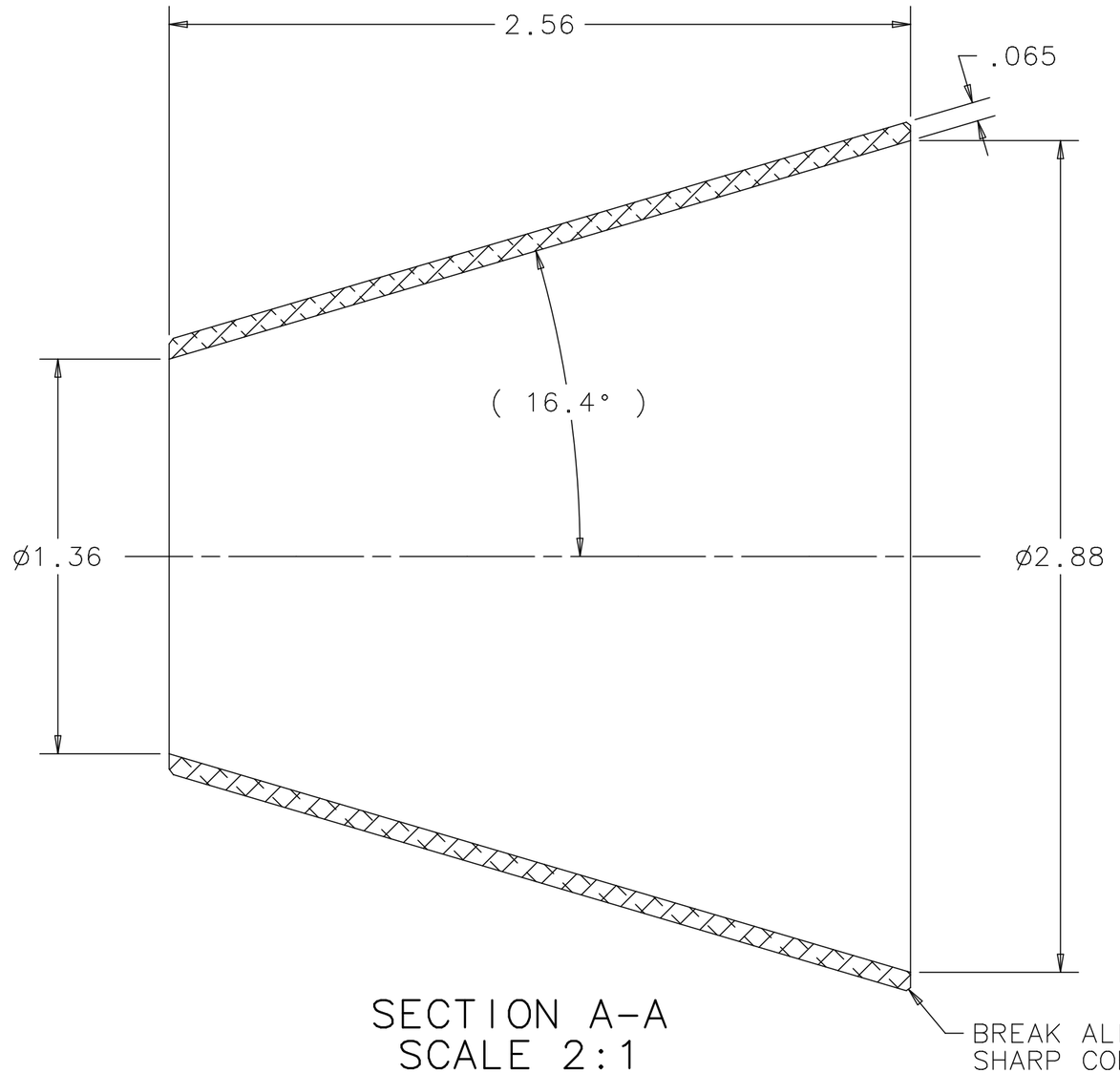

SECTION A-A
SCALE 2:1

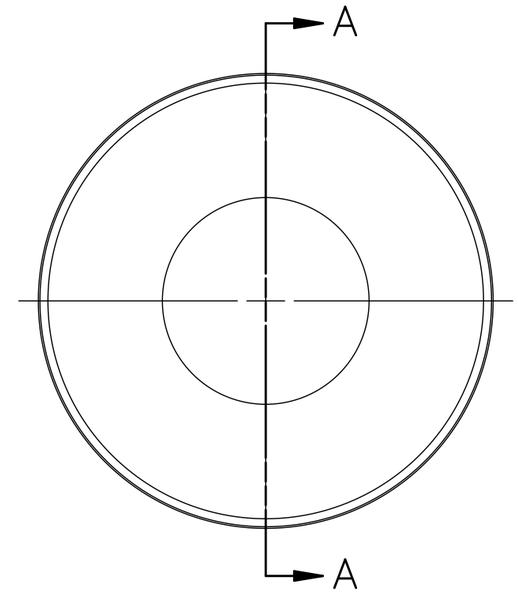

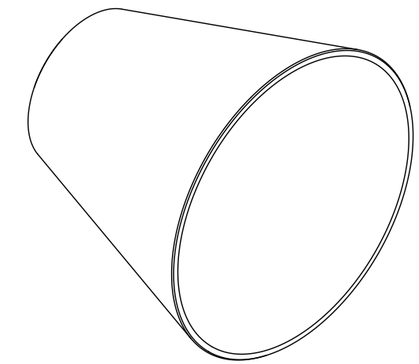

UNLESS OTHERWISE SPECIFIED			ORIGINATOR	M.MCGEE	07-DEC-2010
.XX	.XXX	ANGLES	DRAWN	R.STEWART	07-DEC-2010
± .01	± .005	± .5°	CHECKED	M.MCGEE	17-DEC-2010
			APPROVED	M.MARTENS	17-DEC-2010

1. BREAK ALL SHARP EDGES .015 MAX.
2. DO NOT SCALE DRAWING.
3. DIMENSIONS BASED UPON ASME Y14.5M-1994
4. MAX. ALL MACH. SURFACES 63
5. DRAWING UNITS: U.S. INCH

USED ON: MC-433660 - MC-433661

MATERIAL: 6061-T6 ALUMINUM

FERMI NATIONAL ACCELERATOR LABORATORY
UNITED STATES DEPARTMENT OF ENERGY

NOVA-ANU TARGET HALL
MEDIUM ENERGY TARGET BAFFLE
TOOLING BALL FUNNEL

SCALE	DRAWING NUMBER	SHEET	REV
1:1	8875.112-MB-433663	1 OF 1	

CREATED WITH : Ideas12NXSeries | GROUP: ACCELERATOR MECH. SUPPT.

Created: 14:41:20 on 21-02-13 (D-M-Y) By: rstewart State: 3-RELEASED