REV	DESCRIPTION	DRAWN / APPROVED	DATE / DATE
A	CLAMPING SYSTEM CHANGED	R.STEWART	19-SEP-2011
		M.MCGEE	04-JAN-2012
B	FASTENERS CHANGED	R.STEWART	28-FEB-2012
		M.MCGEE	29-MAR-2012
C	ø13MM APERTURE BAFFLE ASSY ADDED	R.STEWART	13-AUG-2013
		M.MCGEE	13-AUG-2013

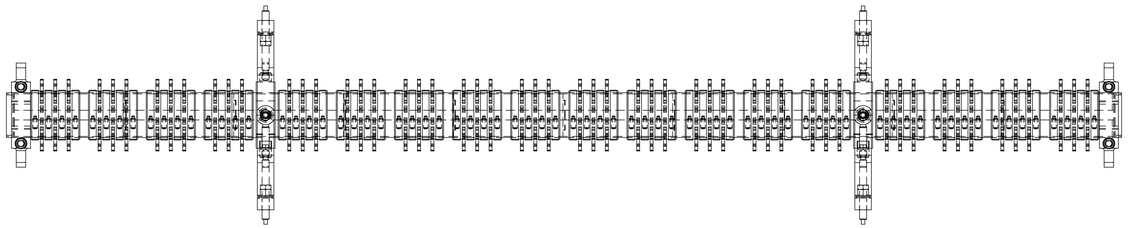

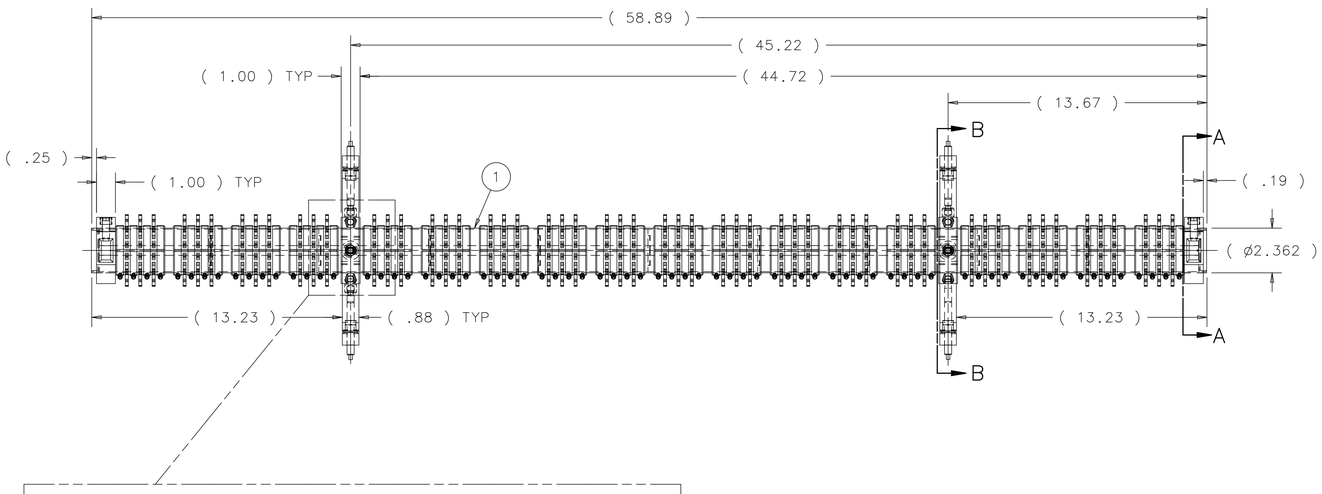

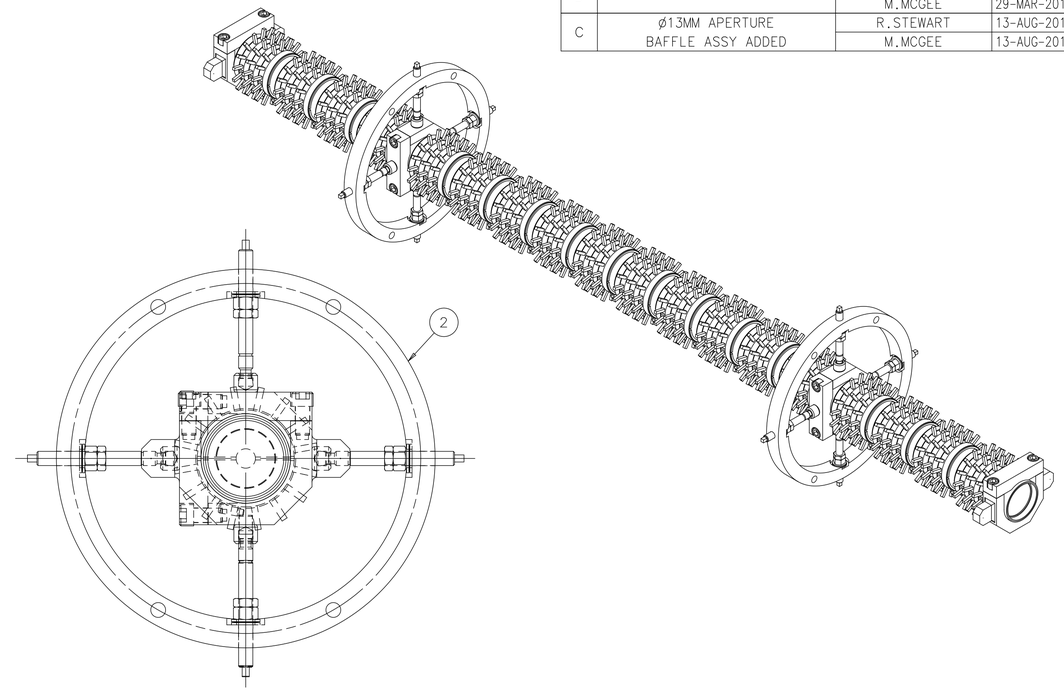

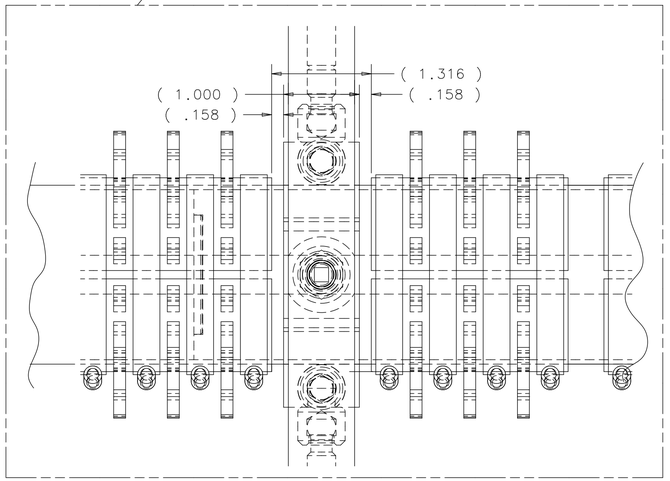

DETAIL VIEW A
SCALE 1:1

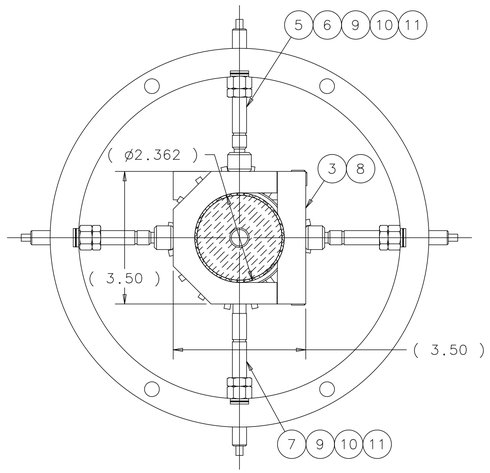

SECTION VIEW B-B
SCALE 1:2

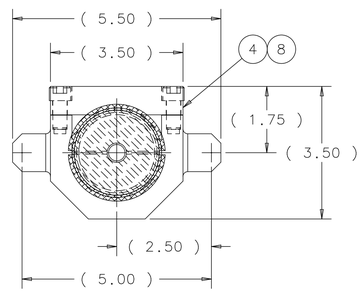

SECTION VIEW A-A
SCALE 1:2

	ITEM	PART NO.	DESCRIPTION OR SIZE	QTY.
B	11	MCMASTER-CARR P/N 94804A320 OR EQ.	3/8-16 HEX NUT 316 SS	8
B	10	MCMASTER-CARR P/N 9713K68 OR EQ.	.380 I.D. SS BELLEVILLE DISC	16
B	9	MCMASTER-CARR P/N 94805A115 OR EQ.	3/8-16 UNC JAM HEX NUT 316 SS	8
B	8	MCMASTER-CARR P/N 92185A622 OR EQ.	3/8-16 UNC X .75" LG. SHCS 316 SS	8
	7	MB-433806	BAFFLE ROD LOCKING	1
A	6	MB-433712	TARGET LEVELING FOOT ROD SHORT	7
A	5	MB-433710	TARGET LEVELING FOOT SWIVEL	7
A	4	MC-433805	BAFFLE LOCATING CLAMP	2
A	3	MC-433804	BAFFLE CLAMP	2
	2	MC-433589	BAFFLE RING	2
C	1	MD-433950	ø13MM APERTURE BAFFLE ASSEMBLY	1

PARTS LIST

UNLESS OTHERWISE SPECIFIED			ORIGINATOR: M.MCGEE	28-SEP-2010
.XX	.XXX	ANGLES	DRAWN: R.STEWART	28-SEP-2010
± .02	± .005	± .5°	CHECKED: M.MCGEE	10-NOV-2010
			APPROVED: M.MARTENS	10-NOV-2010

1. BREAK ALL SHARP EDGES .015 MAX.
2. DO NOT SCALE DRAWING.
3. DIMENSIONS BASED UPON ASME Y14.5M-1994
4. MAX. ALL MACH. SURFACES 63
5. DRAWING UNITS: U.S. INCH

USED ON: ME-433611 - ME-433836

MATERIAL: SEE PARTS LIST ABOVE

FERMI NATIONAL ACCELERATOR LABORATORY
UNITED STATES DEPARTMENT OF ENERGY

NOVA-ANU TARGET HALL
MEDIUM ENERGY TARGET BAFFLE
BAFFLE AND BAFFLE RING ASSEMBLY

SCALE	DRAWING NUMBER	SHEET	REV
1:4	8875.112-MD-433613	1 OF 1	C

CREATED WITH : Ideas12NXSeries GROUP: ACCELERATOR MECH. SUPPT.

WEIGHT: 30 LBS

Created: 11:10:57 on 04-09-13 (D-M-Y) By: rstewart State: 1-INITIAL